CUSTOM SCRM4590 DOUBLE-LIPPED STRIKE & RESCUE STOP COMBO

- **1-3/4" THICK DOOR**
- **⅛" INSET DOOR**
- **SCHLAGE MORTISE LOCK W / DEAD BOLT**
- **6" FRAME**

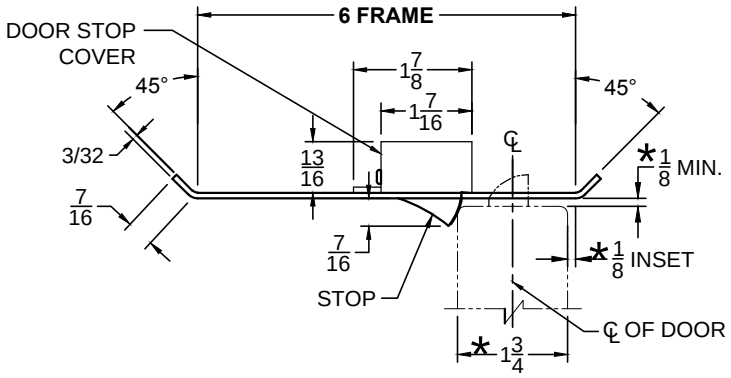

TOP VIEW

STOP IS SPRING LOADED
MAKING PART NON-HANDED
BUT INSTALLATION IS
STILL HANDED

ABH DOOR STOP COVER DIMENSIONS
MAY NOT MATCH OTHER MANUFACTURERS

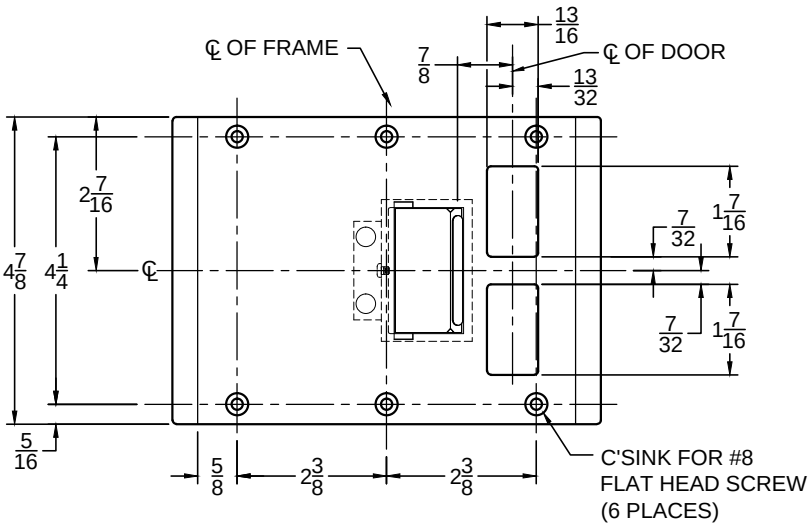

FRONT VIEW

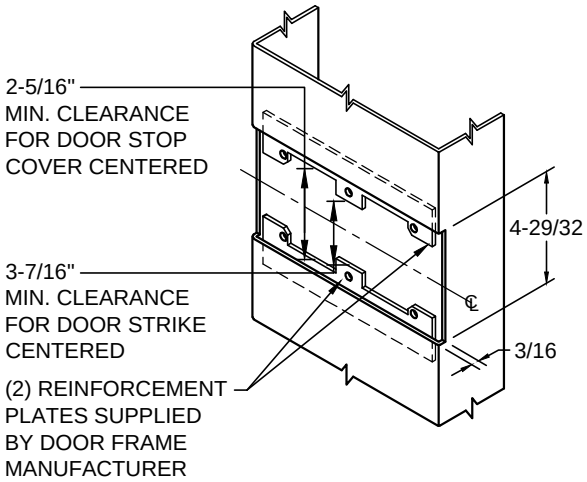

CUT-OUT FOR METAL JAMB

NOTE:

1. HORIZONTAL CENTERLINE OF PLATE TO MATCH HORIZONTAL CENTERLINE OF CUTOUT.
2. SCREWS- 8-32 X 3/8" UNDERCUT F.H.M.S.
3. R.H. DOOR SHOWN, L.H. OPPOSITE (RESCUE STOP IS NON HANDED)
4. DO NOT SCALE DRAWING.
5. FOR CUSTOM RESCUE DOOR STOP CONSULT FACTORY.

REINFORCEMENT:

WHEN INSTALLING IN METAL FRAME, REINFORCEMENT IS **NEEDED** WITH THIS PRODUCT, CUSTOMER OR MANUFACTURER TO SUPPLY FRAME REINFORCEMENT WITH LATCH BOLT CLEARANCE.

* = CRITICAL DIMENSION MUST BE FOLLOWED

SP-CR4578 6.000 x 4.875 SCHLAGE .DWG

® www.abhmfg.com
E-mail: abhinfo@abhmfg.com
Architectural Builders Hardware Mfg., Inc.
1222 Ardmore Ave., Itasca, IL 60143
630.875.9900; FAX 800.9FAXABH (932.9224)

© 2016 ABH Mfg., Inc.
printed in USA

SP-CR4578

ISSUED 12-20-16