IMPORTANT: SEE NOTES NUMBER 3 AND 4	
SARGENT CLOSER SERIES	DATA SHEET NUMBER
351	A6754
1430	A7122
281	A7228

TOP VIEW
(RABBETED HEAD SHOWN)

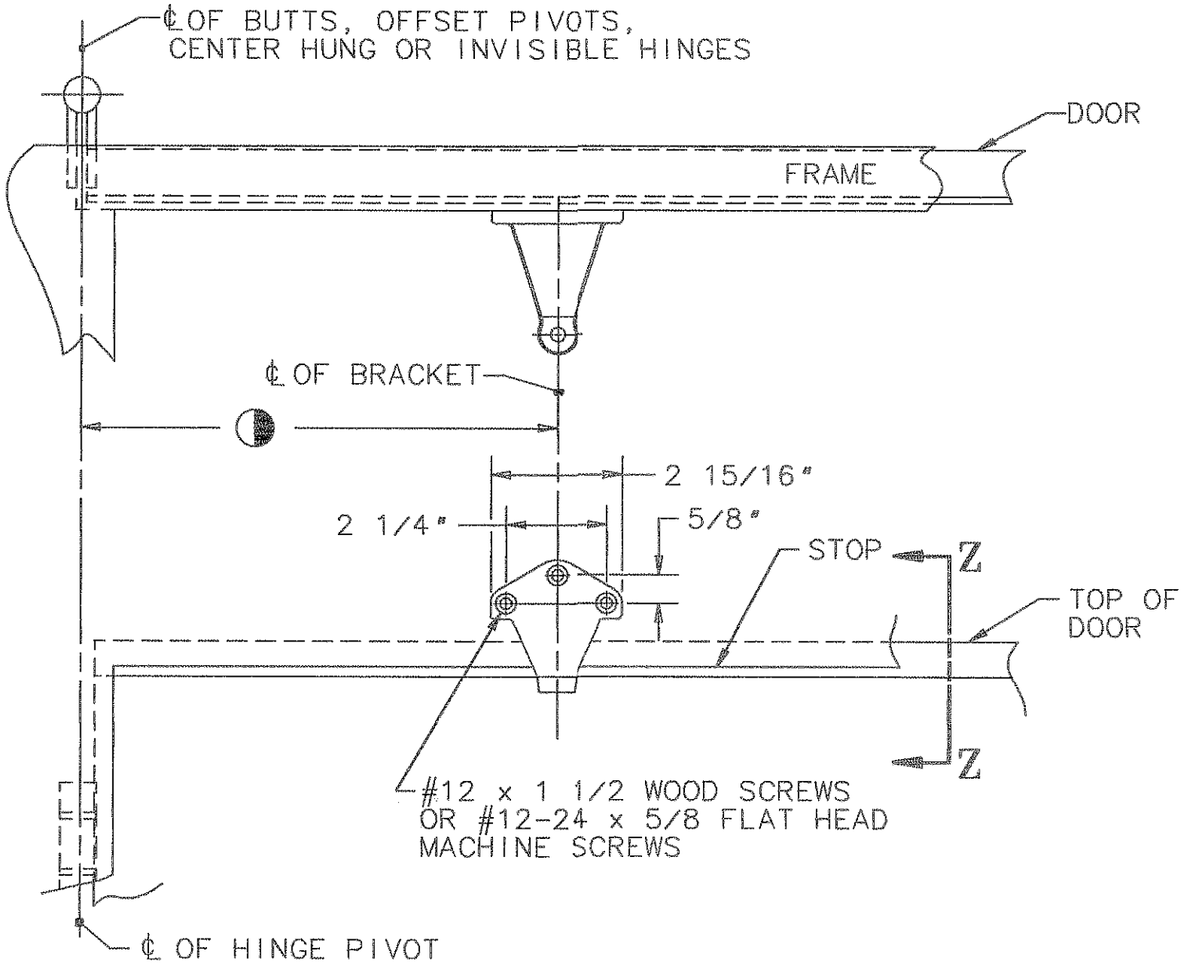

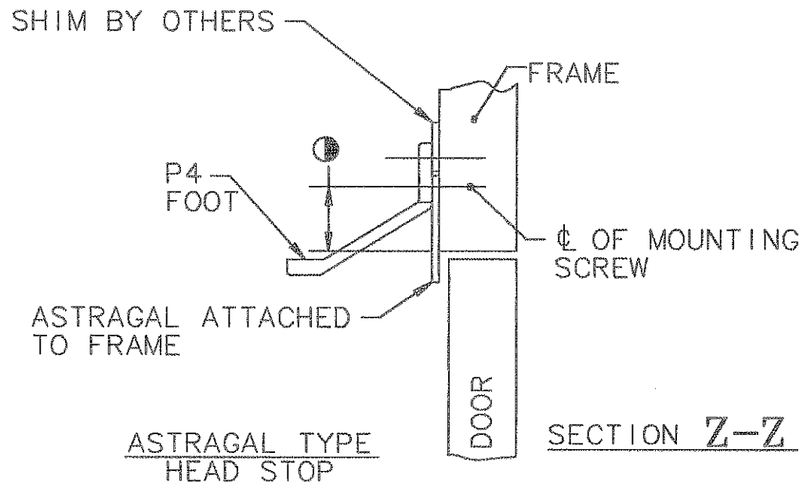

ASTRAGAL TYPE HEAD STOP

SECTION Z–Z

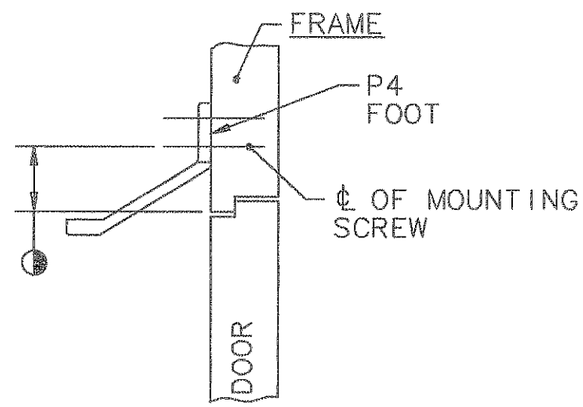

RABBETED HEAD

SECTION Z–Z

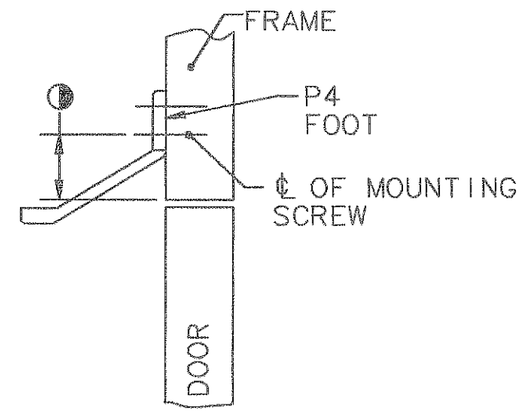

HEAD WITHOUT STOP

③ ◐ SEE DATA SHEET PACKED WITH CLOSER FOR THE LOCATION OF FOOT BRACKET ON THE DOOR FRAME

② LEFT HAND DOOR SHOWN. RIGHT HAND OPPOSITE.

① 12 GUAGE MIN. REINFORCEMENT REQUIRED FOR METAL DOORS & FRAMES.

④ SPECIAL CONDITIONS:
OCCASIONALLY DATA SHEETS OTHER THAN THOSE LISTED ABOVE MUST BE USED TO ACCOMMODATE LARGE BUTTS, EXTRA THICK DOORS, CONFLICTING OVERHEAD STOPS, ETC. WHEN SUCH DATA SHEETS ARE ISSUED, THEY MUST BE USED IN LIEU OF THE DATA SHEETS LISTED IN THE CHART.

SARGENT MANUFACTURING COMPANY — NEW HAVEN, CONN. 06511

DATA SHEET: SARGENT DOOR CLOSER x PARALLEL ARM APPLICATION x 125-P4 CONVERSION UNIT

EFFECTIVE DATE: SEPT. 99

TEMPLET NO. A6636 D