MAXIMUM DEGREE OF DOOR OPENING	DIM 'A'	DIM 'B'
120°	$3\frac{3}{4}''$	$9\frac{1}{2}''$
180°	$1\frac{1}{4}''$	$7''$

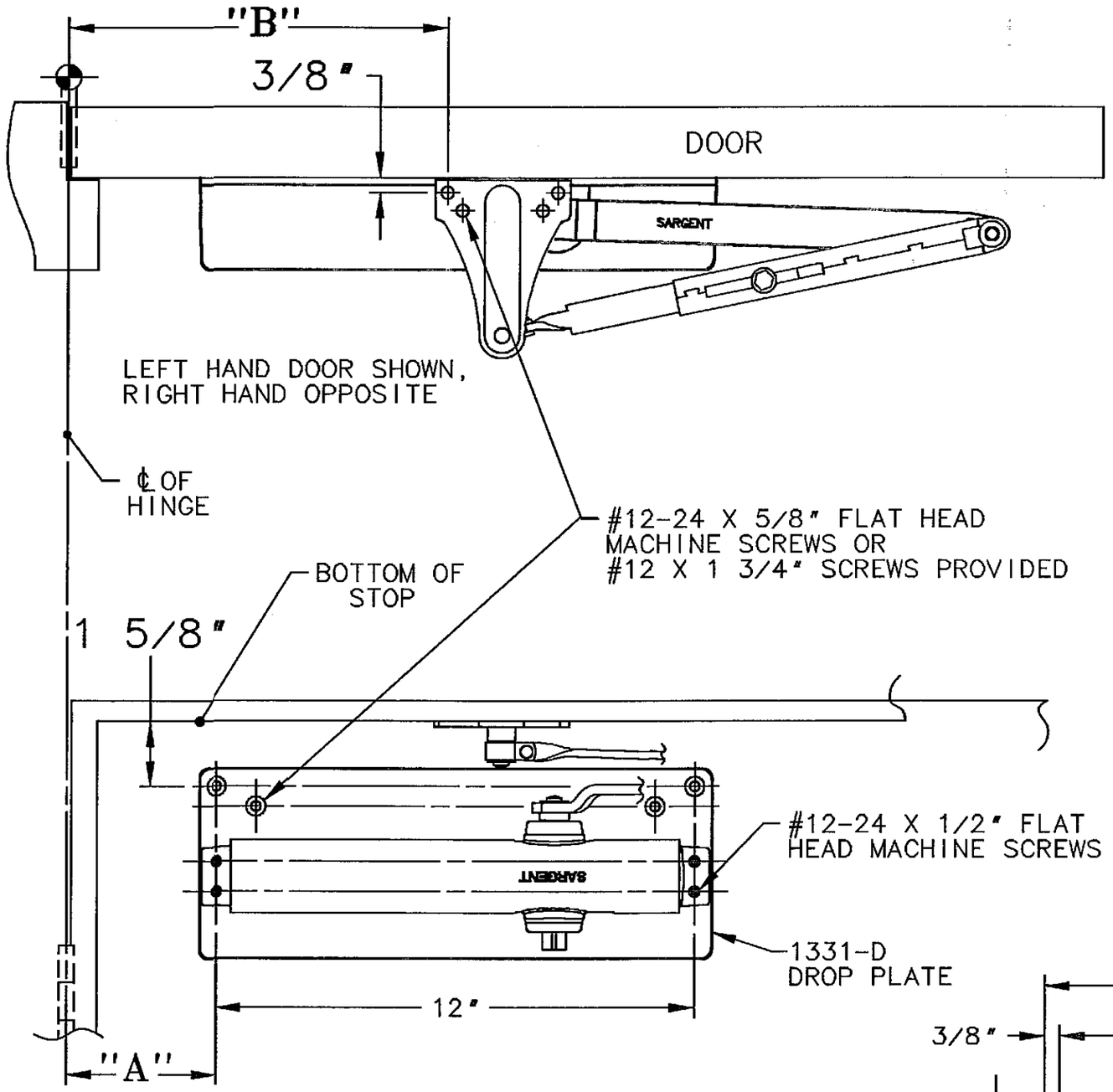

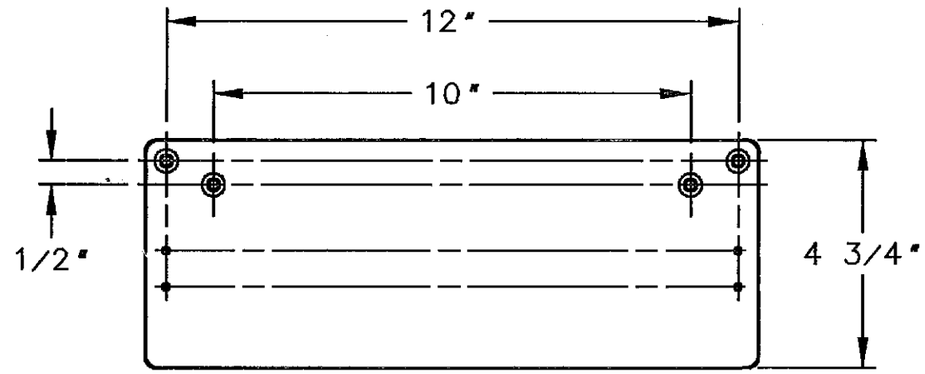

1331-D DROP PLATE DETAIL

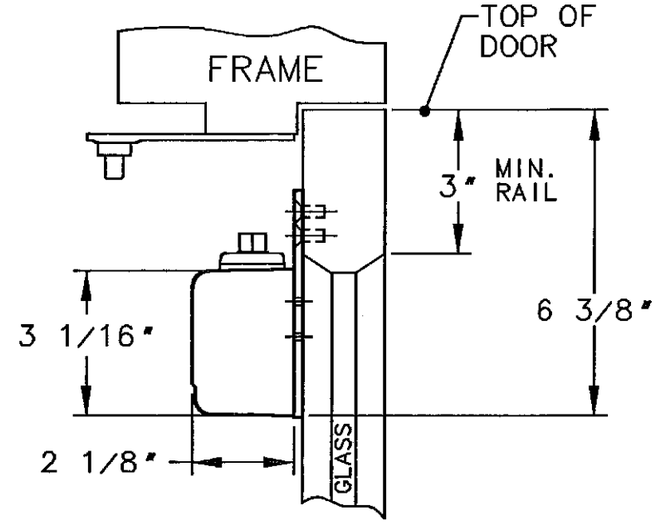

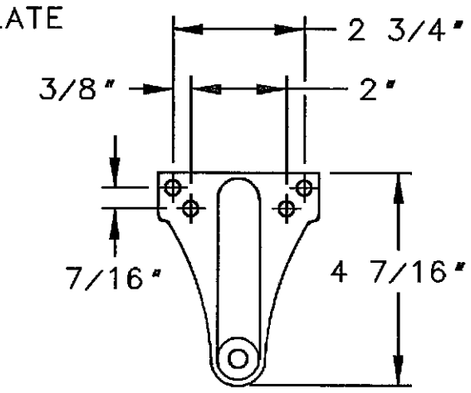

JP9 FOOT BRACKET DETAIL

NOTES

1. REINFORCE METAL DOORS AND FRAMES PER ANSI A250.8 AND SDI-100 STANDARDS, 12 GAUGE RECOMMENDED.

SARGENT® Manufacturing Company
100 Sargent Drive New Haven, CT 06511

DATA SHEET: 1331 DOOR CLOSER WITH JP9 ARM & 1331-D PLATE - PARALLEL ARM APPLICATION FOR NARROW RAIL DOORS

RELEASE DATE APR-16-04

TEMPLATE NO. A7735