MAXIMUM DEGREE OF DOOR OPENING	DIM "A"	DIM "B"
120°	$6\frac{7}{8}$"	$12\frac{3}{8}$"
180°	$4\frac{3}{4}$"	$10\frac{1}{4}$"

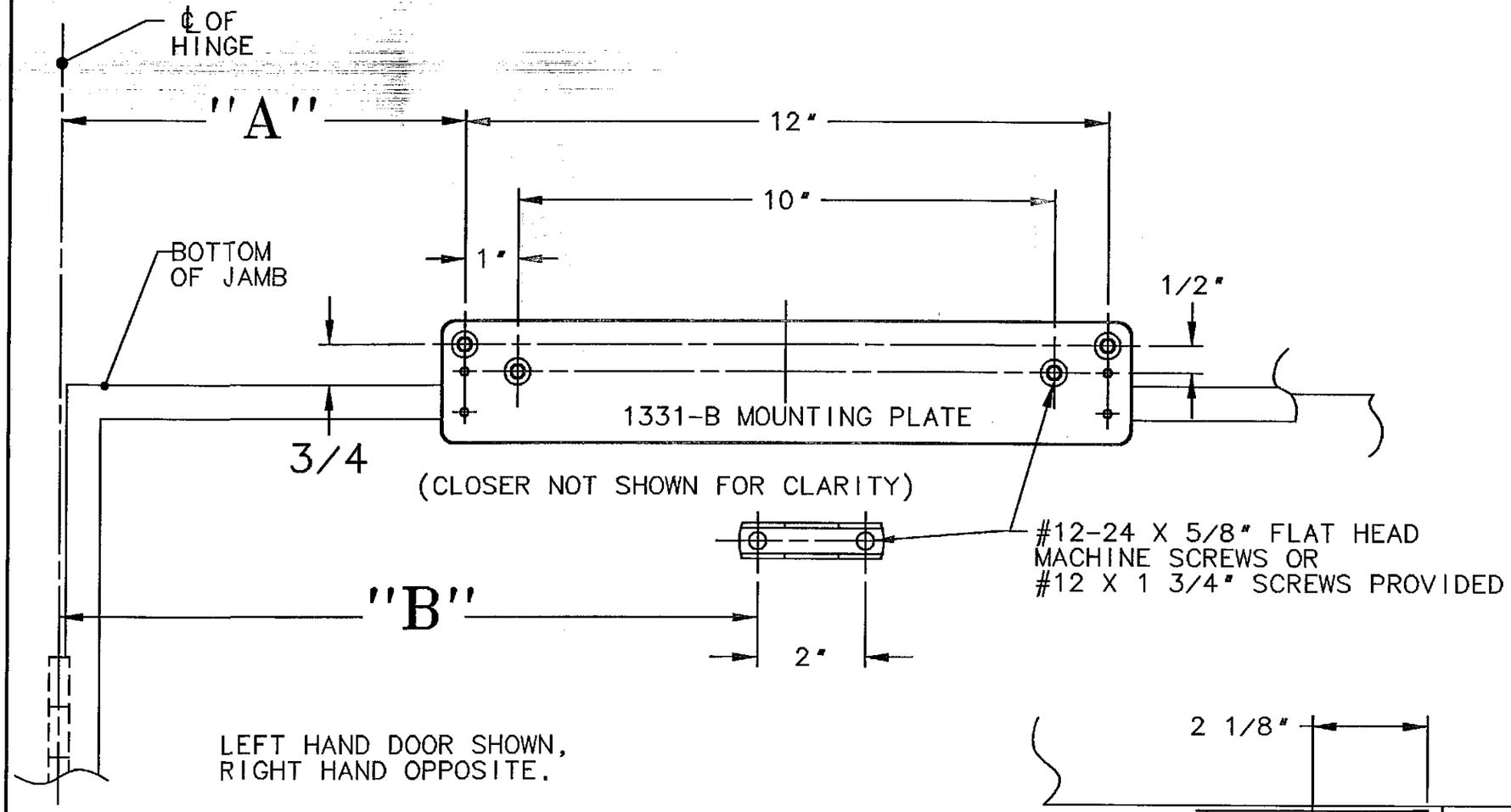

LEFT HAND DOOR SHOWN, RIGHT HAND OPPOSITE.

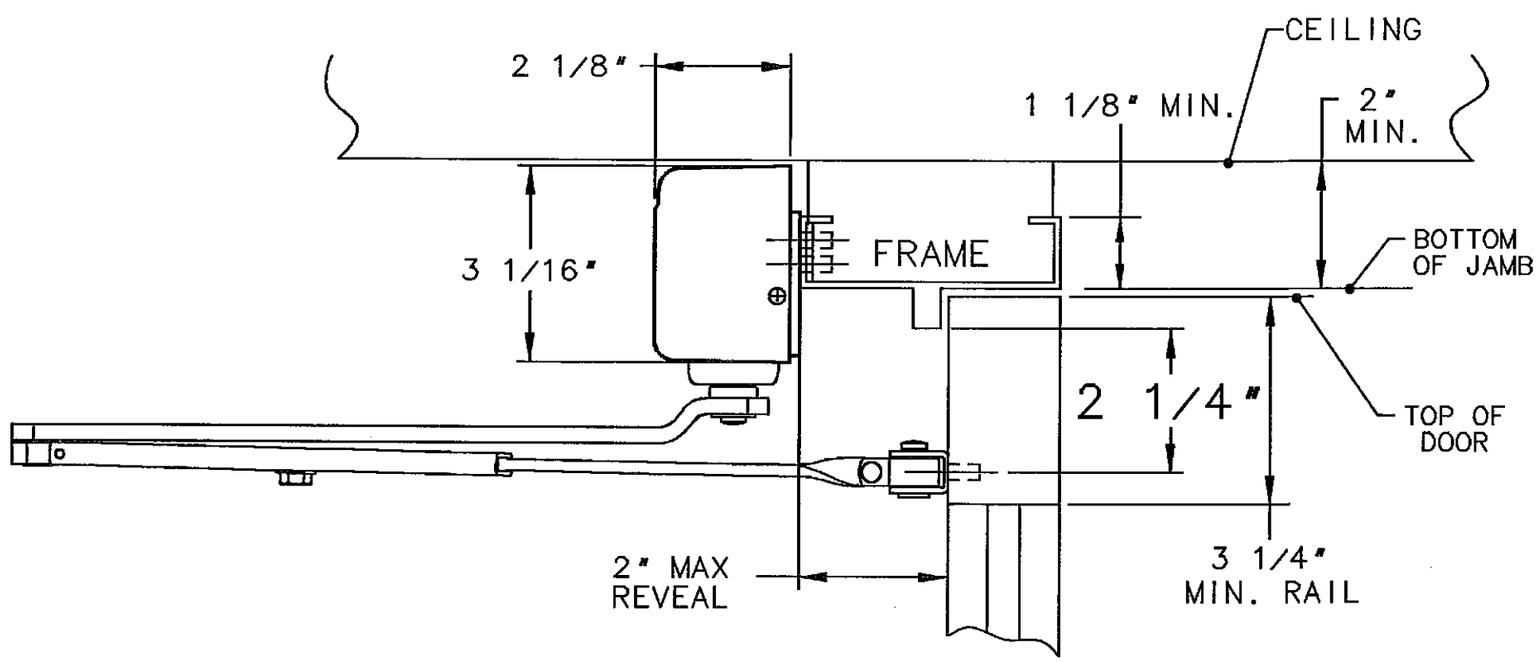

NOTES

1. REINFORCE METAL DOORS AND FRAMES PER ANSI A250.8 AND SDI-100 STANDARDS, 12 GAUGE RECOMMENDED.

SARGENT® Manufacturing Company
100 Sargent Drive New Haven, CT 06511

DATA SHEET: 1331 DOOR CLOSER WITH JO ARM, -TOP JAMB LOW CEILING APPLICATION WITH B MOUNTING PLATE	RELEASE DATE APR-16-04
	TEMPLATE NO. A7734