INSTALLATION INSTRUCTIONS FOR 351 SERIES CLOSURE AND STANDARD ARMS APPLICATION

OLC ARM

FOR INSTALLATION ASSISTANCE, CALL SARGENT AT 1-800-727-5477 • www.sargentlock.com

ARM TYPE	DESCRIPTION	MOUNTING	DIM. A	DIM. B	MAXIMUM DOOR OPENING
"OLC"	LOW PROFILE REGULAR ARM (WITHOUT HOLDER)	STANDARD	8 3/16"	11 7/16"	120°
		ALTERNATE	6 13/16"	10 1/16"	160° ◒

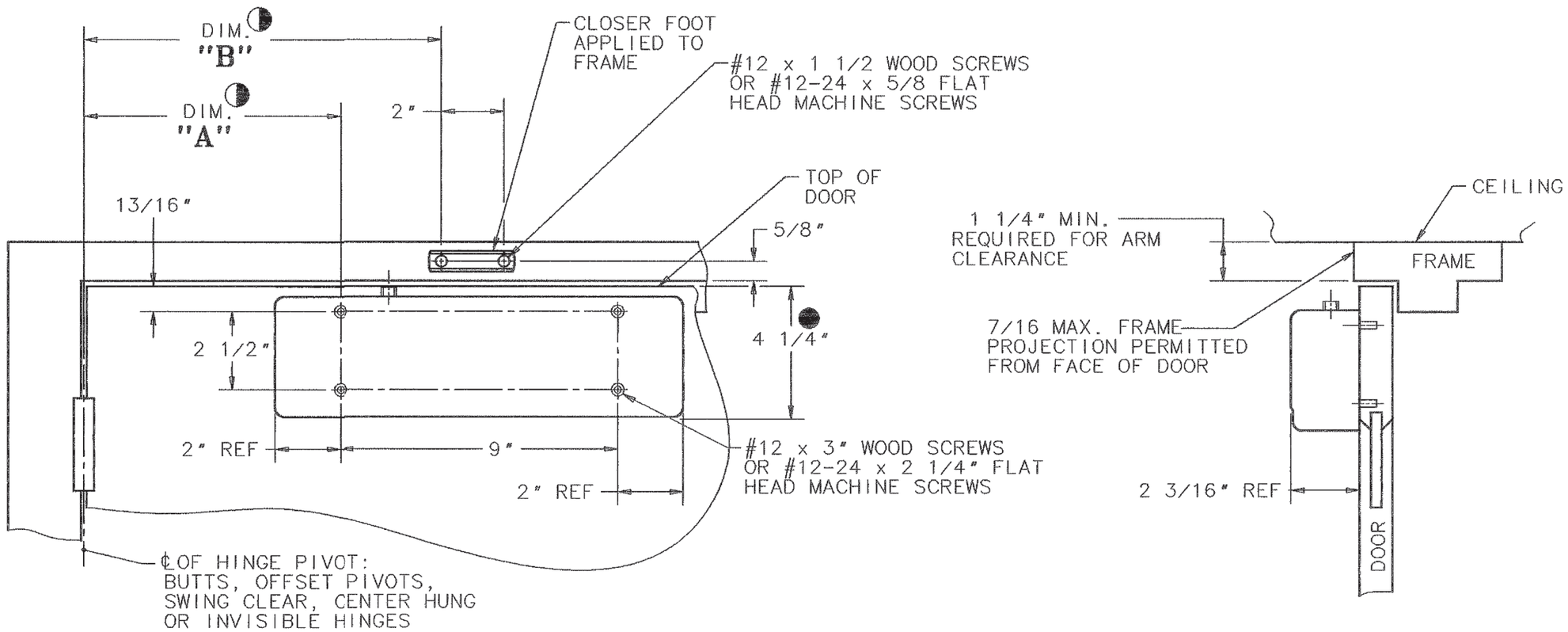

(5) ● 351-A MOUNTING PLATE MAY BE USED FOR DOOR WITH NARROW TOP RAIL. (SEE DATA SHEET A6772)

(4) ◑ THIS DIMENSION IS TAKEN FROM HINGE EDGE OF DOOR FOR INVISIBLE HINGES.

(3) ◒ IF BUTT, FRAME AND WALL CONDITIONS PERMIT, CLOSER WILL ALLOW DOOR TO OPEN 180°.

(2) RIGHT HAND DOOR SHOWN. LEFT HAND DOOR OPPOSITE.

(1) 12 GUAGE MIN. REINFORCEMENT REQUIRED FOR METAL DOORS & FRAMES.

SARGENT
ASSA ABLOY

ASSA ABLOY, the global leader in door opening solutions

A6753B 7/25/12

Copyright © 2000, 2012 Sargent Manufacturing Company, an ASSA ABLOY Group company. All rights reserved.
Reproduction in whole or in part without the express written permission of Sargent Manufacturing Company is prohibited.