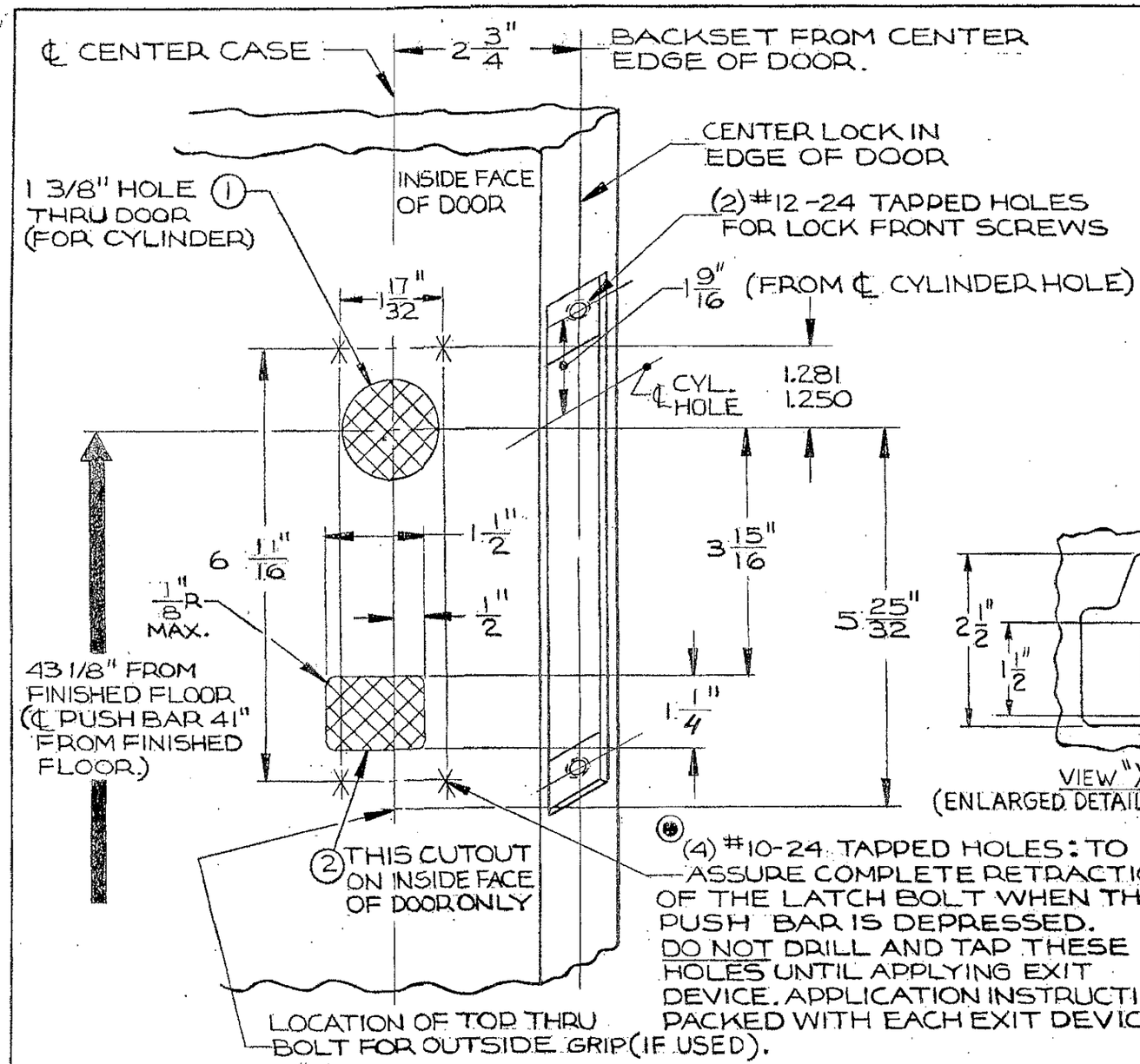

(4) #10-24 TAPPED HOLES: TO ASSURE COMPLETE RETRACTION OF THE LATCH BOLT WHEN THE PUSH BAR IS DEPRESSED. DO NOT DRILL AND TAP THESE HOLES UNTIL APPLYING EXIT DEVICE. APPLICATION INSTRUCTIONS PACKED WITH EACH EXIT DEVICE.

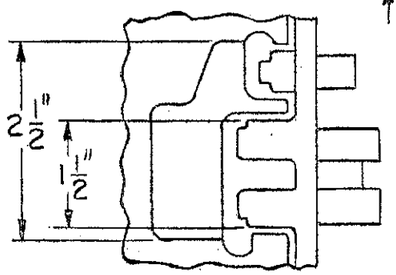

VIEW "X"
(ENLARGED DETAIL FOR CLARITY)

CENTER CASE

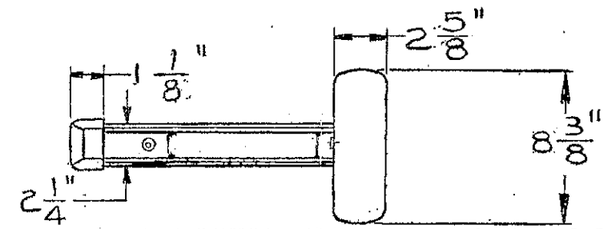

8900 MORTISE LOCK EXIT DEVICE ILLUSTRATED

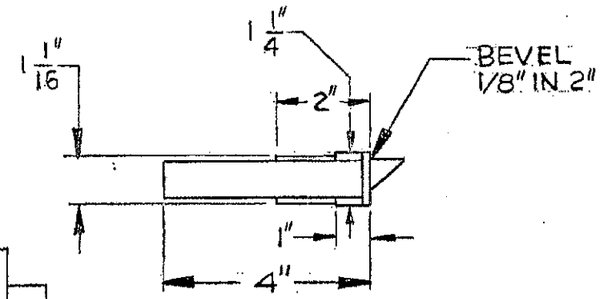

FUNCTION	CUT-OUT REQ'D. ①	CUT-OUT REQ'D. ②
04, 44	●	●
10, 40		●
13 * 43 *	●	●
15		●
16	●	●
28		●
63	●	●
66	●	●
70		●
71		●
75	●	●
76	●	●

* CYL. HOLE NOT REQ'D WHEN "ET" LEVER HANLE CONTROL IS USED.

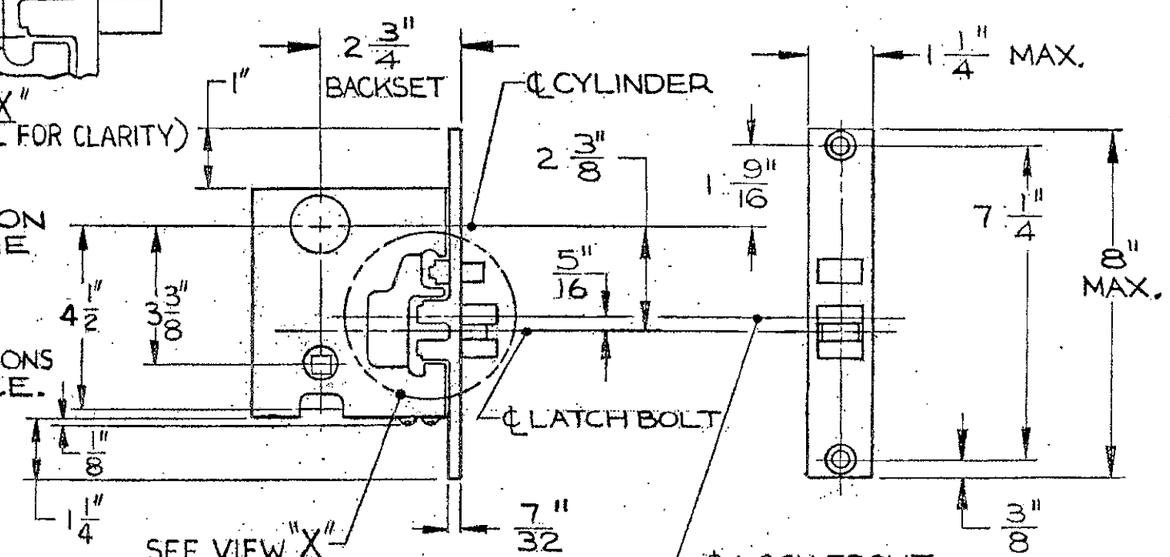

MORTISE LOCK DETAIL

⑥ FOR GLASS BEADED DOORS, IF GLASS BEAD CANNOT BE REMOVED, USE GLASS BEAD SHIM KIT (AVAILABLE ON ORDER).

⑤ SURFACE OF DOOR WHERE EXIT DEVICE IS TO BE APPLIED, MUST BE FLUSH.

④ SEE STRIKE TEMPLATE № 4192 FOR 815 & № 3908 FOR 908 STRIKES.

③ SEE MASTER SHEET № 4019 FOR AREAS REQUIRING REINFORCEMENTS.

② WE RECOMMEND THAT ALL TAPPED HOLES BE DRILLED & TAPPED IN FIELD.

① TOLERANCE ON ALL FRACTIONAL DIMENSIONS ± 1/64".

SARGENT & COMPANY — NEW HAVEN, CONN. 06509

TEMPLATE: MORTISE LOCK EXIT DEVICE
8900, 12-8900, WS-8900, 12-WS8900

RELEASE DATE: JUL 8 05

TEMPLET NO. 4290 J