93270 MANUAL FLUSH BOLT
FOR WOOD DOOR APPLICATIONS

TEMPLATE: 939308
REV. 1 03-11-15

TOP BOLT SHOWN

- NOT TO SCALE -

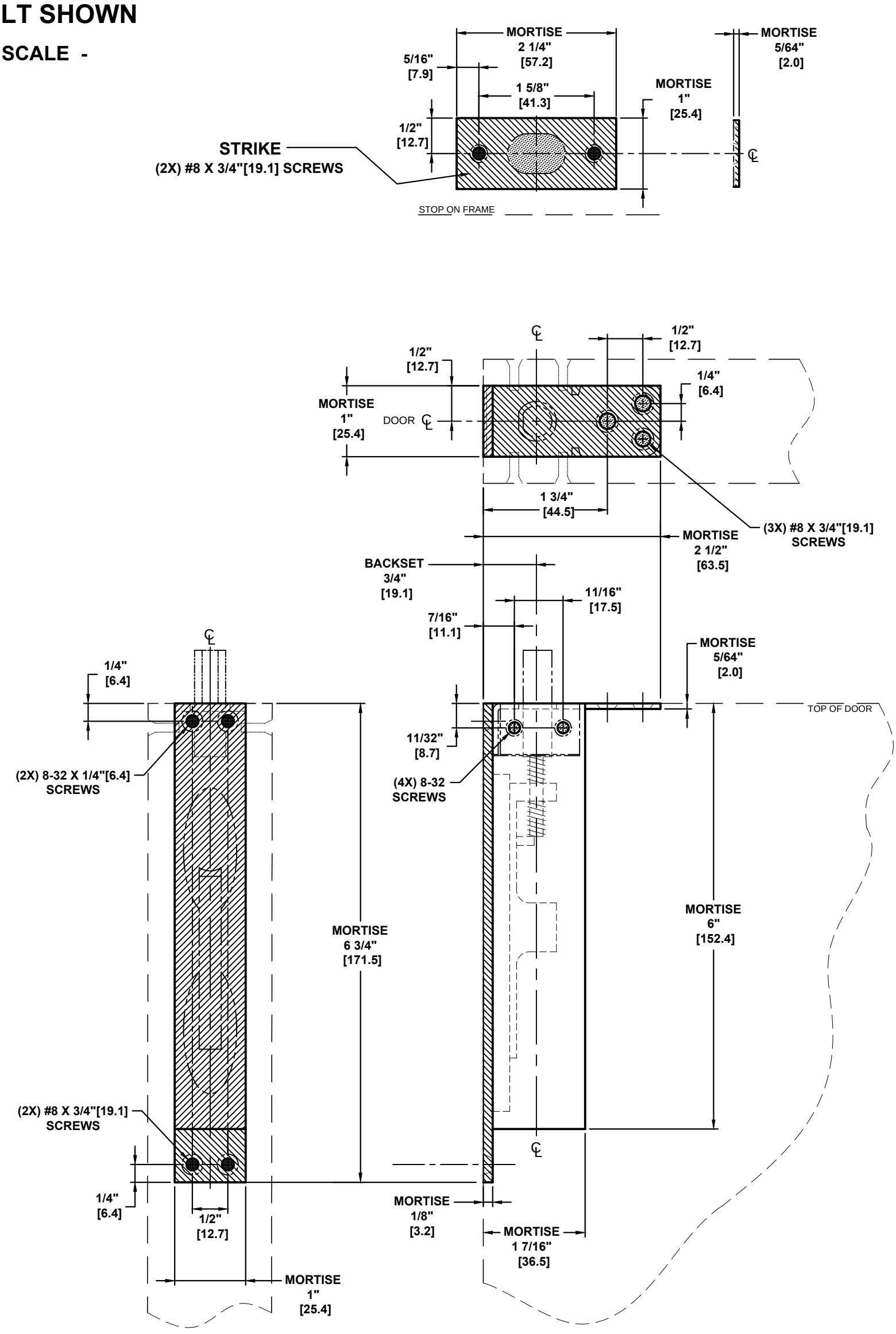

NOTES:

1. DIMENSIONS IN **INCHES [MM]**.
2. DIMENSIONS USING DEVICE AS TOP BOLT ARE AS SHOWN. FOR USE AS BOTTOM BOLT, INVERT AND MEASURE FROM THE BOTTOM EDGE OF THE DOOR
3. ALWAYS CHECK PDQ WEBSITE FOR THE MOST RECENT TEMPLATE REVISION AT WWW.PDQLOCKS.COM

PDQ Manufacturing
2754 Creek Hill Rd.
Leola, PA 17540
800-441-9692
Fax: 717-656-6892
www.pdqlocks.com