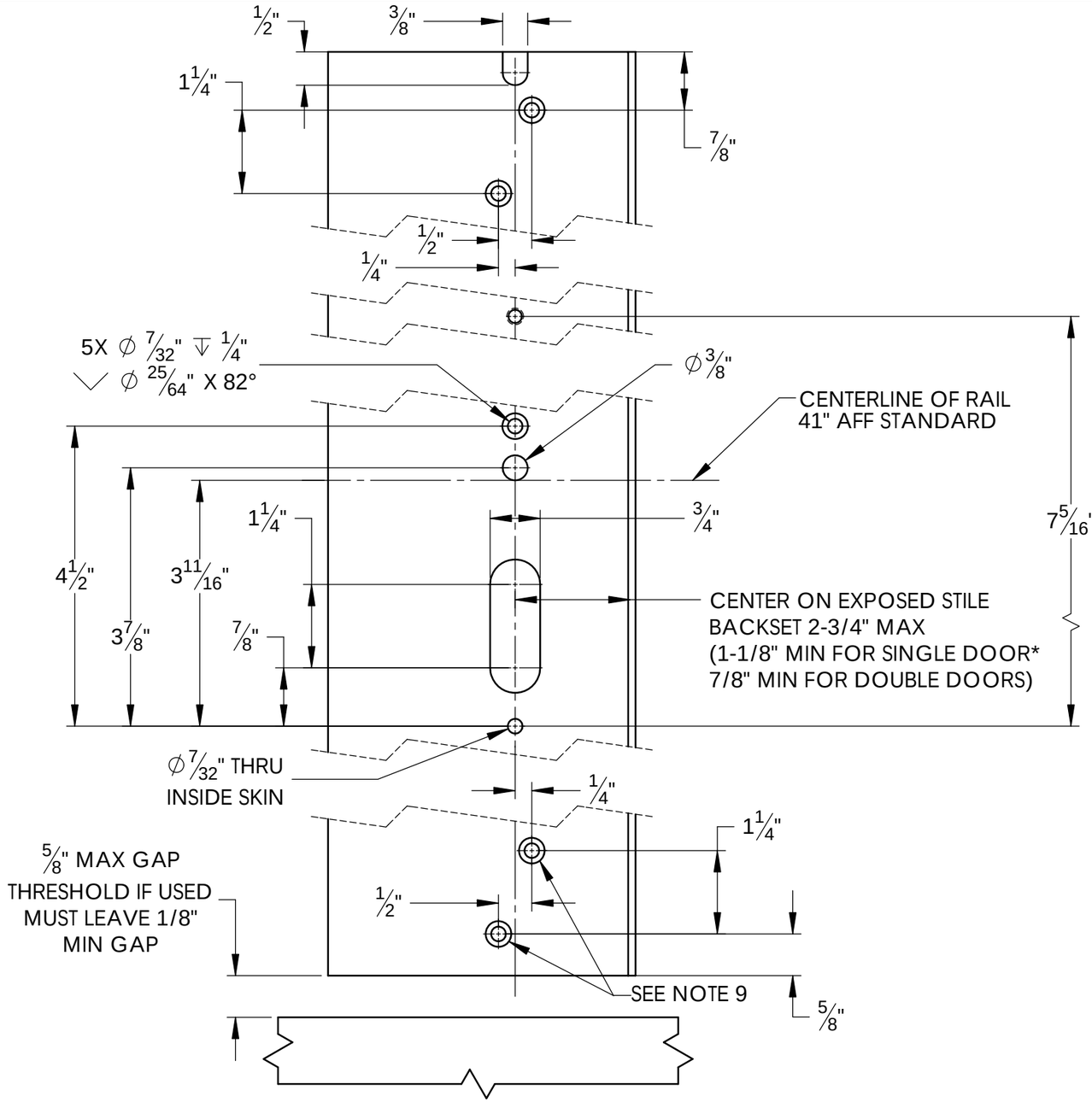


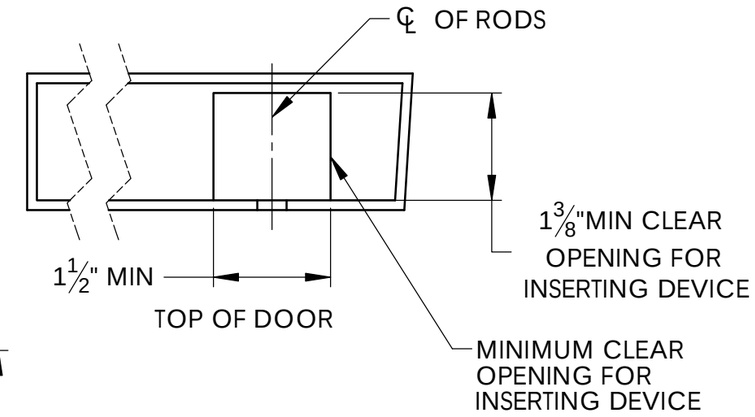


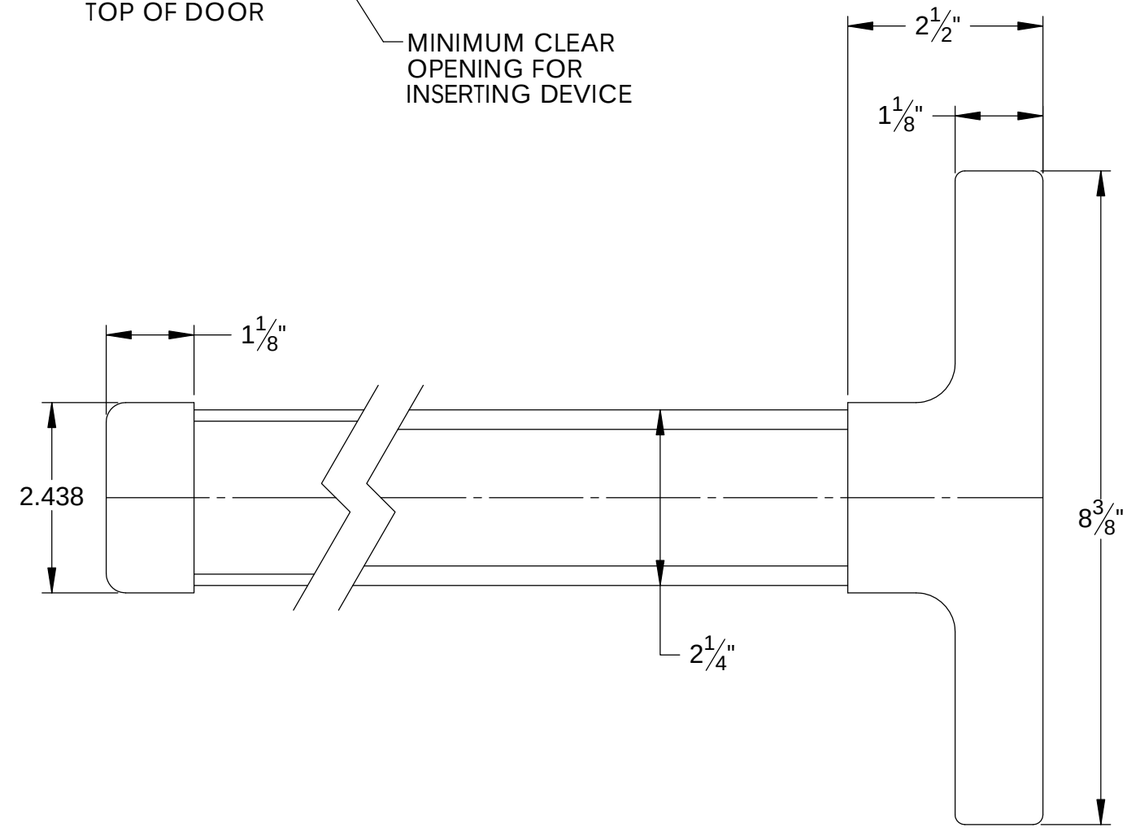


NOTES:

1. DOOR PREPARATION SHOWN IS FOR INSIDE OF DOOR ONLY
2. IF OUTSIDE PULL AND/OR OUTSIDE CONTROL IS USED, SEE APPROPRIATE METAL DOOR TEMPLATE FOR OUTSIDE DOOR PREP.
3. *MIN BACKSET FOR SINGLE DOOR IS BASED ON 1/2" FRAME STOP, LARGER FRAME STOPS REQUIRE LARGER BACKSET.
4. SURFACE OF DOOR WHERE EXIT DEVICE IS TO BE APPLIED, MUST BE FLUSH
5. WE RECOMMEND THAT ALL TAPPED HOLES BE DRILLED AND TAPPED IN FIELD.
6. TOLERANCE ON ALL FRACTIONAL DIMENSIONS ± 1/64"
7. BOTTOM AND TOP STRIKES MUST BE USED, SEE STRIKE TEMPLATE NO. 4649.
8. SEE TEMPLATE 4212 FOR AUX CONTROL IF REQ'D
9. FOR NB PREFIX, HOLES FOR BOTTOM CASE ARE NOT REQUIRED

SARGENT® Manufacturing Company
100 Sargent Drive New Haven, CT 06511

DOOR MANUFACTURERS TEMPLATE:
AD8400 NARROW DESIGN CONCEALED
VERTICAL ROD EXIT DEVICE FOR
ALUMINUM DOORS (INSIDE ONLY)

RELEASE DATE
11 MARCH 2014

TEMPLATE NO.
4312 K