This product is now proudly being offered under the ASSA ABLOY ACCENTRA™ brand, effective June 20, 2023. Visit YaleCommercial.com/en/Today for support and information.

791 STRIKE DETAIL

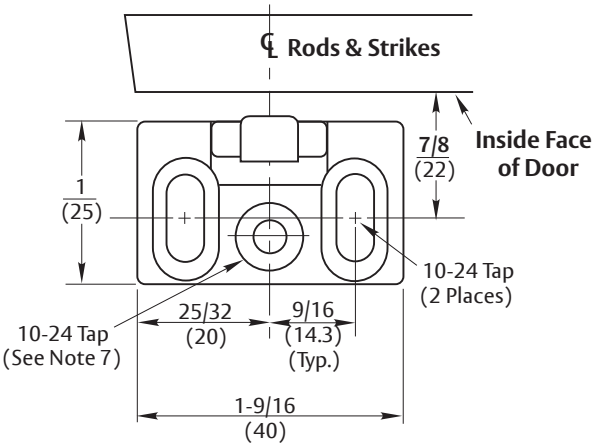

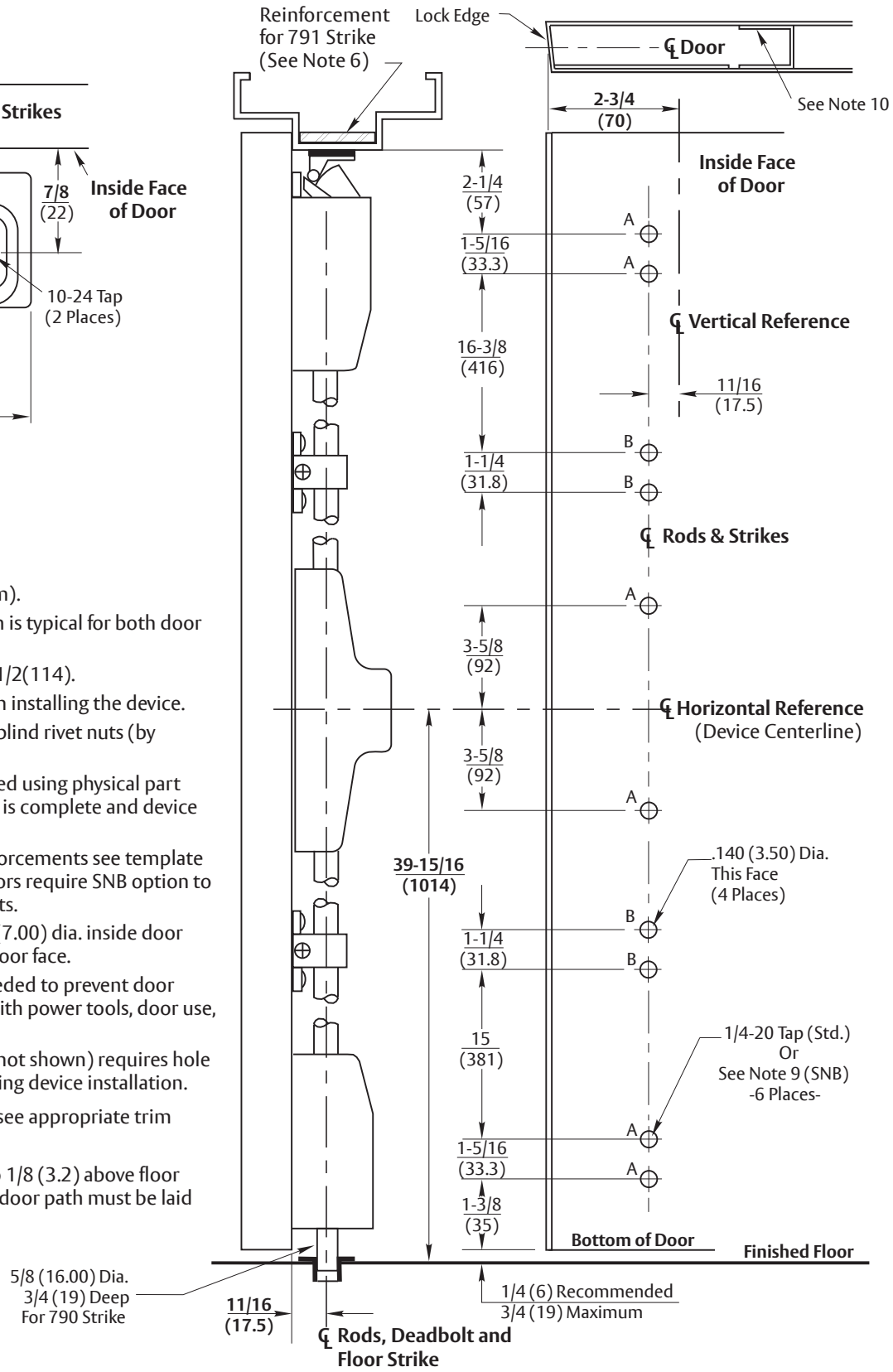

Notes:

1. Do not scale drawing.
2. Dimensions are in inches (mm).
3. LHR door shown. Preparation is typical for both door hands.
4. Minimum door stile width 4-1/2(114).
5. Prepare mounting holes when installing the device.
6. Unreinforced frames require blind rivet nuts (by others) to mount the strike.
7. This hole MUST be field located using physical part as template, after installation is complete and device is fully operational.
8. For recommended door reinforcements see template 7400-0000. Unreinforced doors require SNB option to mount the device components.
9. Holes for optional SNB: 9/32 (7.00) dia. inside door face; 3/8 (9.50) dia. outside door face.
10. Provide door stiffeners, as needed to prevent door collapse due to installation with power tools, door use, or abuse.
11. Device mount to hinge stile (not shown) requires hole location and preparation during device installation.
12. For outside trim preparation see appropriate trim template.
13. Bottom bolt should retract to 1/8 (3.2) above floor strike. Floor coverings in the door path must be laid accordingly.

RESPONSIBILITY
DOOR AND FRAME MANUFACTURERS ARE RESPONSIBLE FOR PROVIDING ADEQUATE CONSTRUCTION OR REINFORCEMENTS FOR PROPER INSTALLATION OF HARDWARE SHOWN. ALL ARCHITECTURAL BUILDERS HARDWARE MUST BE INSTALLED ON PROPERLY REINFORCED DOORS AND FRAMES, REGARDLESS OF TYPE, MATERIAL, OR METHOD OF CONSTRUCTION.

2110(F) & 1810(F)
Surface Vertical Rod Fire/Panic Exit Devices with Bottom Pullman Latch Option
Standard Application for Metal Door and Frame with 790 Floor Strike
Contact us for support at 1-855-557-5078.

ASSA ABLOY

SUPERSEDES	04/10	DO NOT SCALE DRAWING	
TEMPLATE NUMBER	7421-0010	DATE	12-23

Experience a safer and more open world

Copyright © 2010, 2023, ASSA ABLOY Access and Egress Hardware Group, Inc. All rights reserved. Reproduction in whole or in part without the express written permission of ASSA ABLOY Access and Egress Hardware Group, Inc. is prohibited.