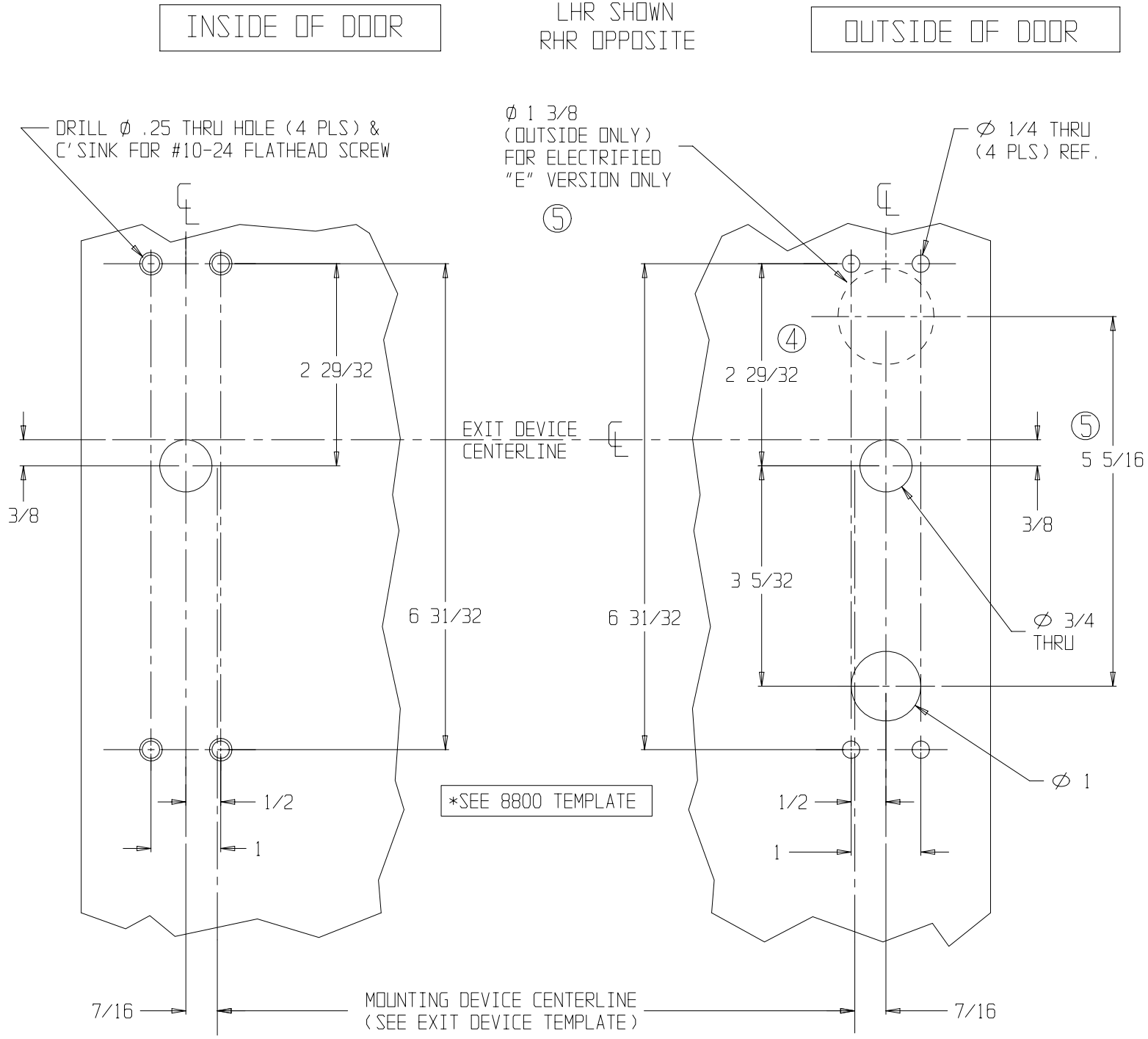

ADAMS RITE MANUFACTURING COMPANY
POMONA, CA 91767

3081, 3082, 3083
(INCLUDING "E" VERSION)
ENTRY TRIM FOR 8800 RIM
ALUMINUM DOOR PREPARATION

NOTE: SEE MASTER SHEET 10001
FOR SUGGESTED REINFORCEMENT

DATE:	ECN:	TEMPLATE NO.:
10-21-02	10370	20147-5