Corbin Russwin
ASSA ABLOY

NEW DESIGN END CLAMP and END CAP

FM 213 10/10

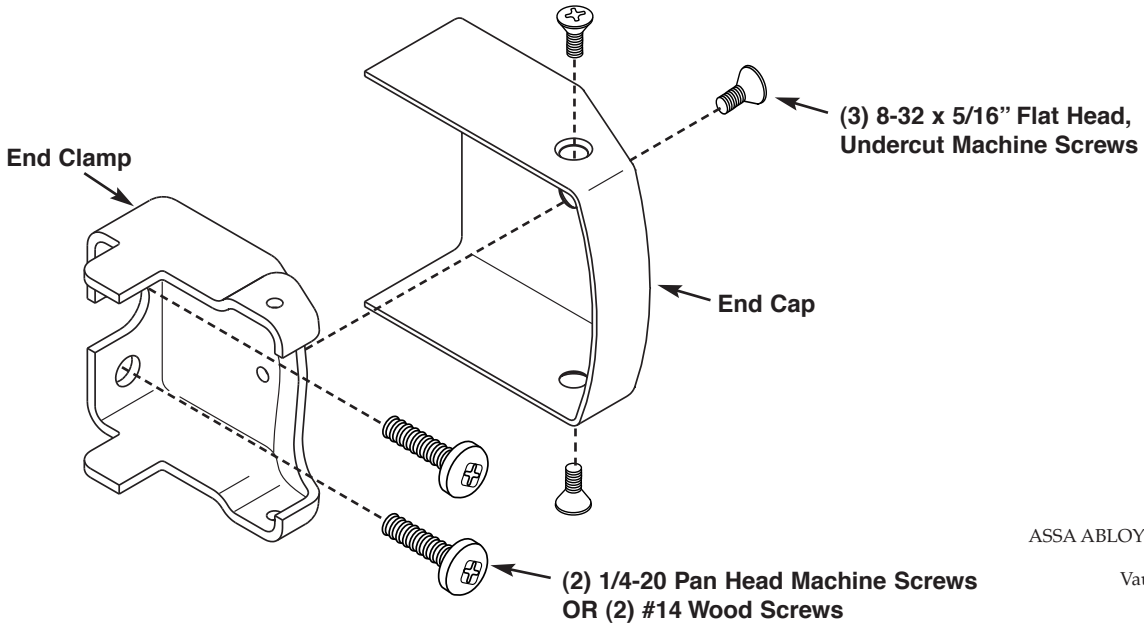

Corbin Russwin
ASSA ABLOY

In U.S.:
Corbin Russwin, Inc.
225 Episcopal Road
Berlin, CT 06037 USA
Phone: 800-543-3658

Technical Product Support:
Phone: 888-607-5703

In Canada:
ASSA ABLOY Door Security Solutions Canada
160 Four Valley Drive
Vaughan, Ontario, Canada L4K 4T9
Phone: 800-461-3007

ASSA ABLOY, the global leader in door opening solutions

Copyright © 2009-2010 Corbin Russwin, Inc., an ASSA ABLOY Group company. All rights reserved.
Reproduction in whole or in part without the express written permission of Corbin Russwin, Inc. is prohibited.