NEW DESIGN FRONT BAR INSERT

FM 217 9/08
(617417350)

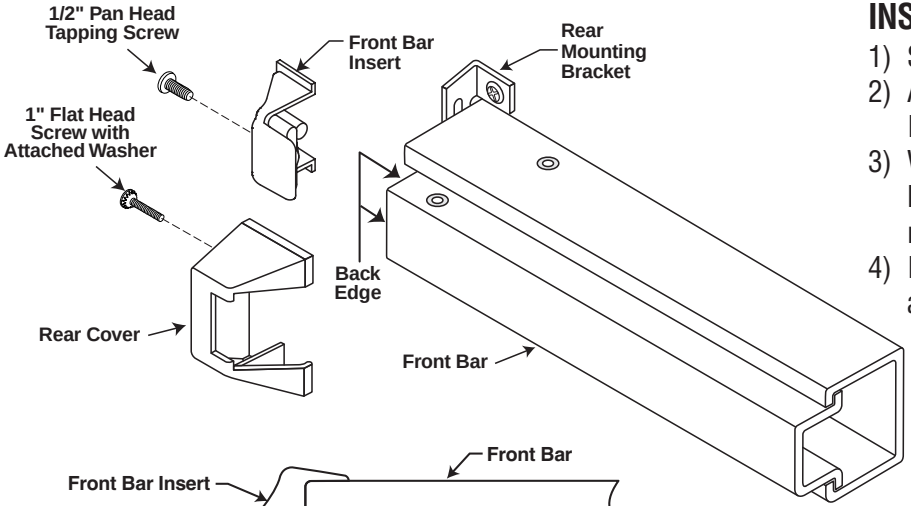

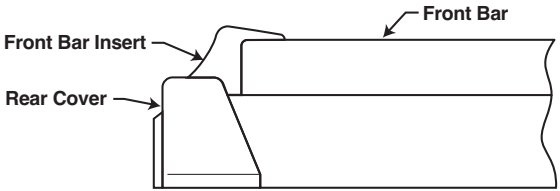

Assembled View

INSTRUCTIONS:

1) Slide Front Bar Insert over end of Front Bar.
2) Assemble 1/2” pan head tapping screw through Insert mounting hole.
3) While holding Insert flush against back edge of Front Bar, tighten screw to bottom of recessed mounting hole.
4) Install Rear Cover using 1” flat head screw with attached washer.

In Canada:
ASSA ABLOY Door Security Solutions Canada
160 Four Valley Drive
Vaughan, Ontario, Canada L4K 4T9
Phone: 800-461-3007

In U.S.:
Corbin Russwin, Inc.
225 Episcopal Road
Berlin, CT 06037 USA
Phone: 860-225-7411

ASSA ABLOY, the global leader in door opening solutions

Copyright © 2008 Corbin Russwin, Inc., an ASSA ABLOY Group company. All rights reserved.
Reproduction in whole or in part without the express written permission of Corbin Russwin, Inc. is prohibited.