681F70 TOP STRIKE DETAIL
(See Note 7)

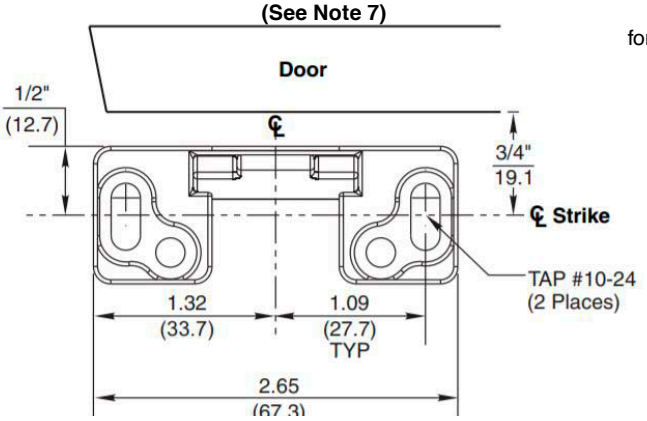

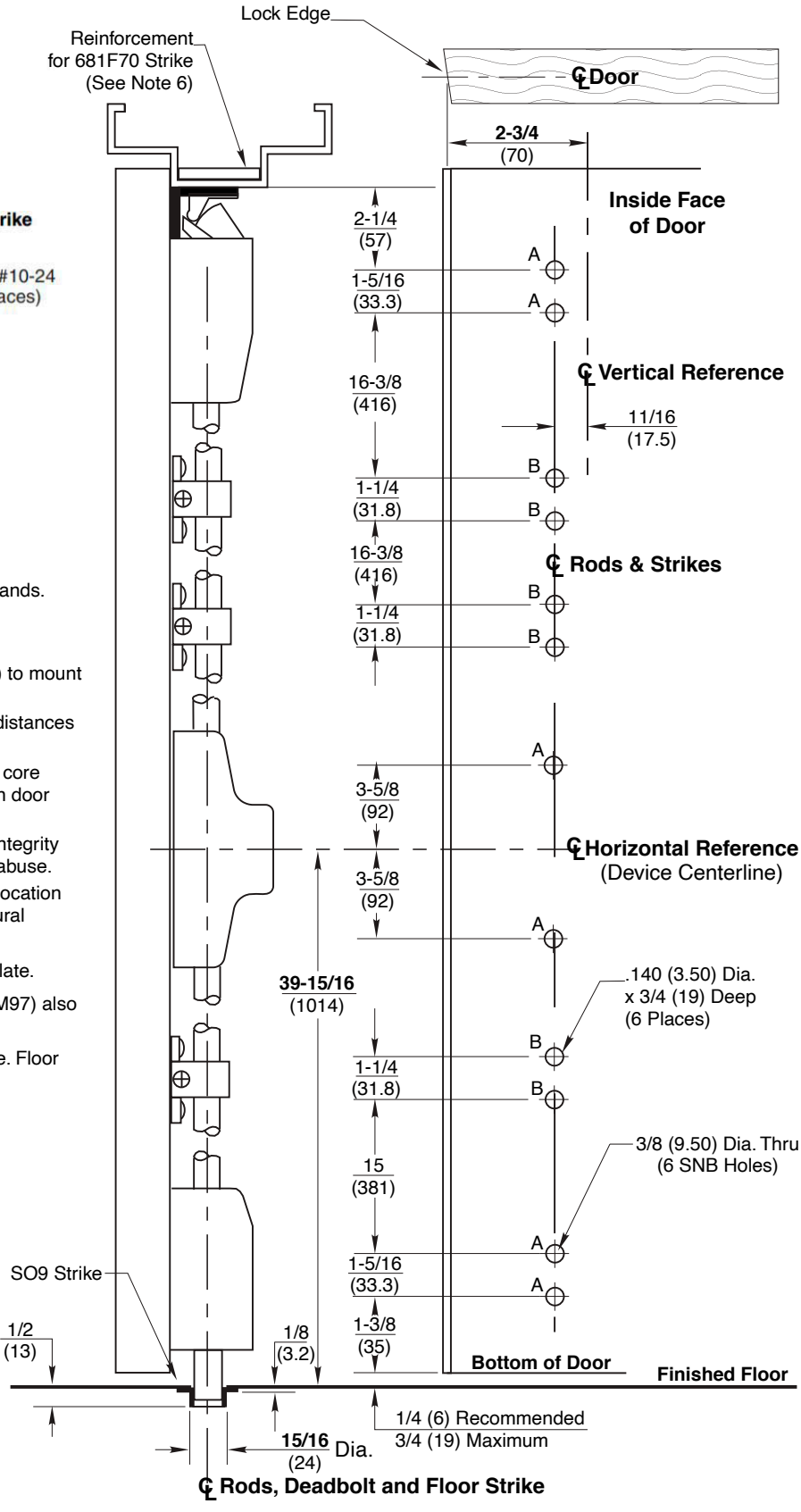

Notes:

1. Do not scale drawing.
2. Dimensions are in inches (mm).
3. LHR door shown. Preparation is typical for both door hands.
4. Minimum door stile width 4-1/2(114).
5. Prepare mounting holes when installing the device.
6. Unreinforced frames require blind rivet nuts (by others) to mount the strike.
7. Door in frame with door silencers. Compensate strike distances for other conditions.
8. Wood screws #14x1-1/4" (by others) permitted in solid core wood doors if pilot holes are used for installation, when door label allows its use.
9. Provide adequate structural support to maintain door integrity after device installation with power tools, door use, or abuse.
10. Device mount to hinge stile (not shown) requires hole location and preparation during device installation. Door structural requirements are similar for both door stiles.
11. For outside trim preparation see appropriate trim template.
12. For electrical devices (suffixes M91, M92, M93, M94, M97) also see template T30890.
13. Bottom bolt should retract to 1/8 (3.2) above floor strike. Floor coverings in the door path must be laid accordingly.

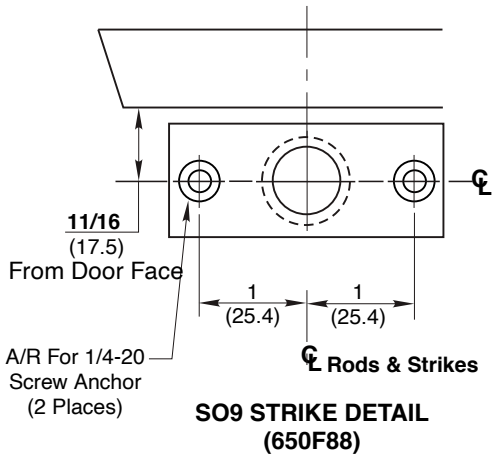

SO9 STRIKE DETAIL
(650F88)

ED5470 H1000 & ED5470B H1000 Series Surface Vertical Rod Exit Devices with Optional SO9 Floor Strike

Application for Wood or Composite Door and HM Frame without Threshold

Corbin Russwin
ASSA ABLOY
www.corbinrusswin.com

SUPERSEDES	T30900-1	DO NOT SCALE DRAWING	
TEMPLATE NUMBER	T30900-2	DATE	02-21

Experience a safer
and more open world

Copyright © 2008, 2021, ASSA ABLOY Access and Egress Hardware Group, Inc.
All rights reserved. Reproduction in whole or in part without the express written permission of ASSA ABLOY Access and Egress Hardware Group, Inc. is prohibited.