REFERENCE ONLY, NOT TO SCALE
DO NOT USE AS A DRILLING TEMPLATE
CALL 800-849-8324

E-PLEX® 5x00 Door Preparation

NOTES:
1- USE DIMENSIONS FROM DIAGRAM A TABLE TO ADJUST BACK-SET POSITION ACCORDING TO LOW AND HIGH BEVEL DOOR EDGE.
2- DIMENSIONS ARE SYMETRICAL ABOUT ℄ UNLESS OTHERWISE NOTED.
3- DEPTH MEASURED FROM THE FRONT OF DOOR, ON THE CENTER LINE (℄)

SYMBOLS USED
↧ DEEP
℄ CENTER LINE
Ø DIAMETER
[ ] mm DIMENSION

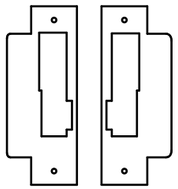

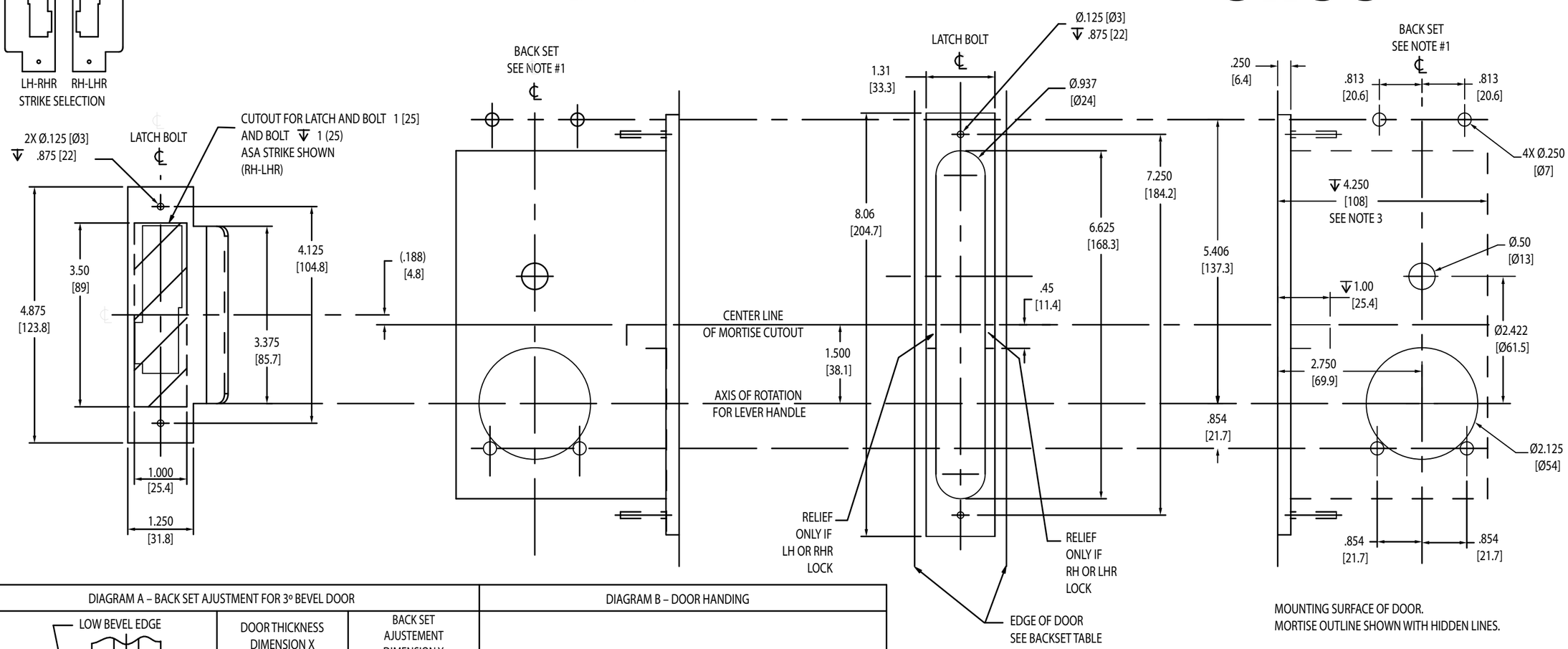

DIAGRAM A – BACK SET AJUSTMENT FOR 3º BEVEL DOOR

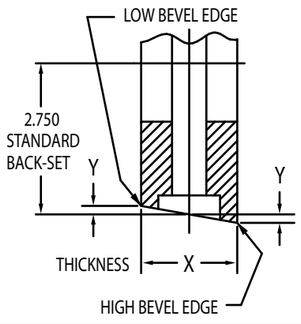

DOOR THICKNESS DIMENSION X	BACK SET AJUSTEMENT DIMENSION Y
1.375 [34.9mm]	.036 [0.91mm]
1.50 [38.1mm]	.039 [1.00mm]
1.75 [44.5mm]	.046 [1.17mm]
2.00 [50.8mm]	.052 [1.32mm]
2.25 [57.2mm]	.059 [1.50mm]
2.50 [63.5mm]	.065 [1.65mm]
2.75 [69.9mm]	.072 [1.83mm]

DIAGRAM B – DOOR HANDING

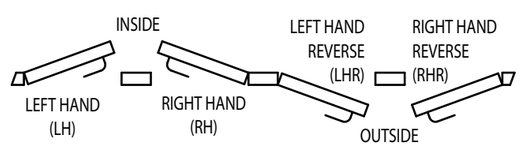

KABA®
2941 Indiana Avenue
Winston-Salem, NC 27105 USA
Tel: (800) 849-8324 (336) 725-1331
Fax: (800) 346-9640 (336) 725-3269

PKG3095 1206