## LEFT HAND DOOR

Handing: Look at the door from exterior side.
Use the corresponding diagram below to determine the handing of your door.



Left Hand  Left Hand Reverse

## RIGHT HAND DOOR

Handing: Look at the door from exerior side.
Use the corresponding diagram below to determine the handing of your door.



Right Hand  Right Hand Reverse

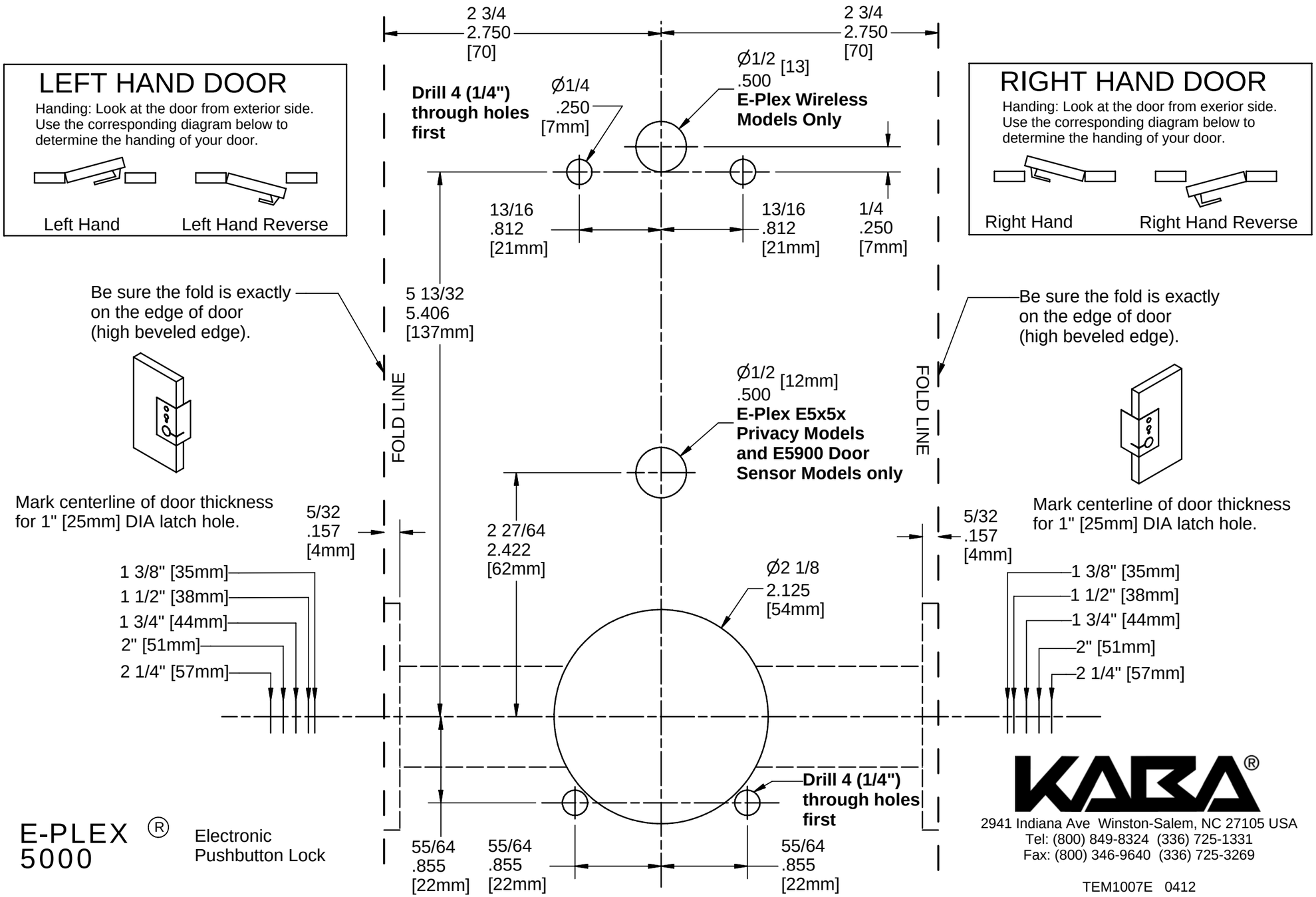


E-PLEX ®
5000

Electronic
Pushbutton Lock


KABA®
2941 Indiana Ave  Winston-Salem, NC 27105 USA
Tel: (800) 849-8324  (336) 725-1331
Fax: (800) 346-9640  (336) 725-3269


TEM1007E  0412