Architectural Door Accessories

ASSA ABLOY

McKinney 5 x 4½, 5 x 5 Full Mortise Concealed Circuit Hinges (6 & 8 Wires)

The global leader in door opening solutions

DO NOT SCALE
DIMENSIONS: INCHES (MM)

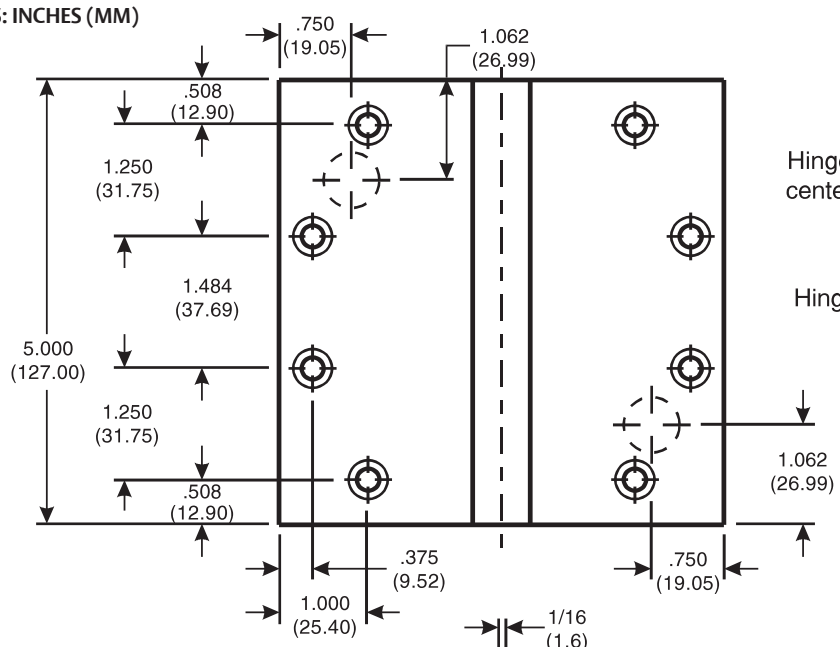

Hinge to be applied in center position on door

Hinges are not handed

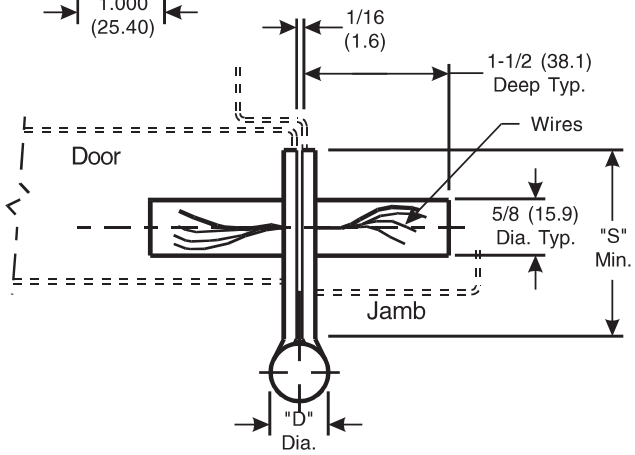

Installation holes for wires to be burr free

Bottom view (Hinge in closed position)

CATALOG NUMBER		GAUGE OF METAL	"D" OUTSIDE DIAMETER	"S" DISTANCE (SWAGE LINE)	
				HINGE WIDTH	
STEEL HINGES	*NON-FERROUS HINGES			4½ (114.3)	5 (127.0)
TA 2731xCC	TA 3331xCC	.146 (3.71)	.525 (13.33)	1-29/32 (48.4)	2-5/32 (54.8)
TA 3750xCC	TA 3350xCC	.190 (4.83)	.701 (17.80)	1-13/16 (46.0)	2-1/16 (52.4)

Template 282-98

Effective date:
March 30, 1998

Supercedes: All Previous

McKINNEY Template Hinges of the Catalog Numbers are made to conform to ANSI/BHMA 156.7 for Screw Hole Location and Gauge of Metal. Wire location and hole size conforms to this drawing.

Machine Screw Size:
½ x 12-24 F.H.

Wood Screw Size:
1¼ x 12 F.H.

*Check Catalog for Metals.

225 Episcopal Road
Berlin CT 060377
P: 800.346.7707 | F: 800.541.1073
www.mckinneyhinge.com | dss-orders@assaabloy.com

McKinney is a brand associated with Corbin Russwin, Inc., an ASSA ABLOY Group company. Copyright © 2017, Corbin Russwin, Inc.
All rights reserved. Reproduction in whole or in part without the express written permission of Corbin Russwin, Inc. is prohibited.