Norton ® is a registered trademark of Yale Security Inc., an ASSA ABLOY Group company. Copyright © 2003, 2008, Yale Security Inc., an ASSA ABLOY Group company.
All rights reserved. Reproduction in whole or in part without the express written permission of Yale Security Inc. is prohibited.

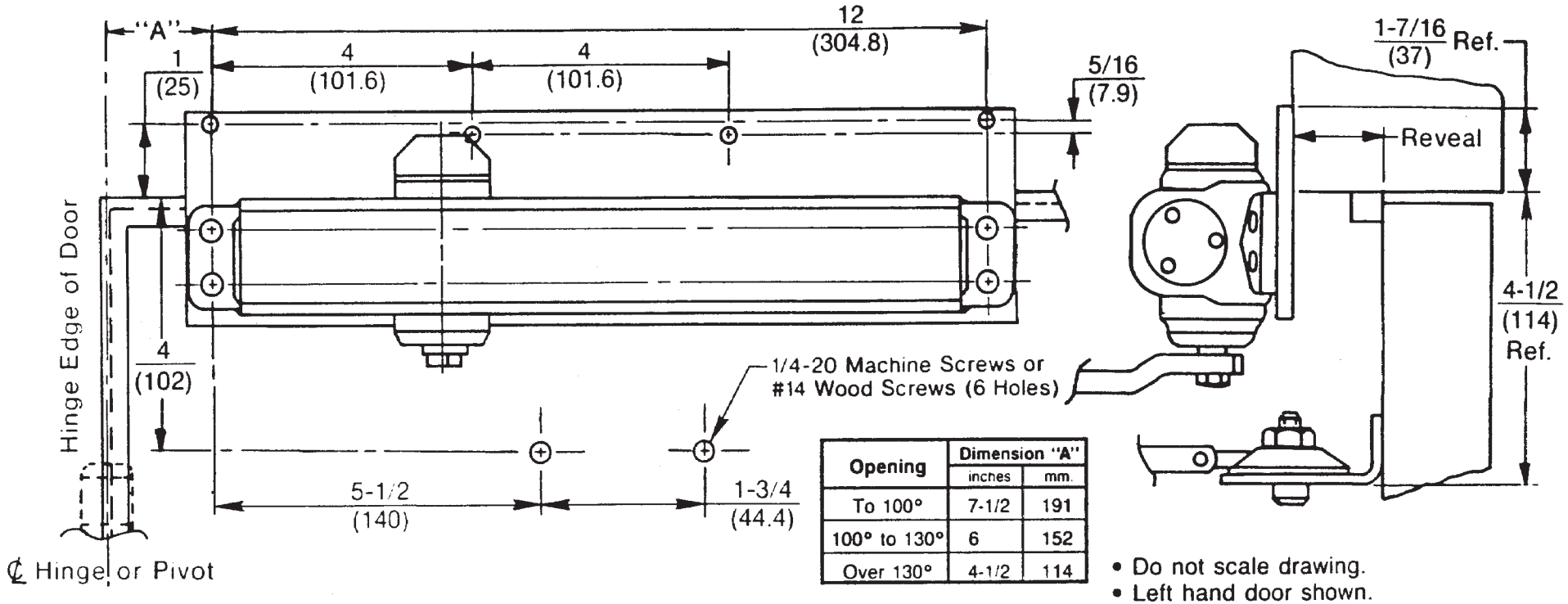

Opening	Dimension "A"	
	inches	mm.
To 100°	7-1/2	191
100° to 130°	6	152
Over 130°	4-1/2	114

- Do not scale drawing.
- Left hand door shown.
- Dimensions are in inches (mm.).
- Hollow metal doors require channel or box type reinforcement when thru bolt mount is specified.
- Sex bolts required for wood or plastic faced fire door mounting.
- Minimum thickness recommended for reinforcements in hollow metal doors and frames: .1046" (2.66 mm.) unless otherwise noted.
- Use regular length rod for reveals to 3" (76 mm.). Use long rod for reveals 2-3/4" (70 mm.) to 6-3/4" (171 mm.).

Position of Arm and Pinion Flat

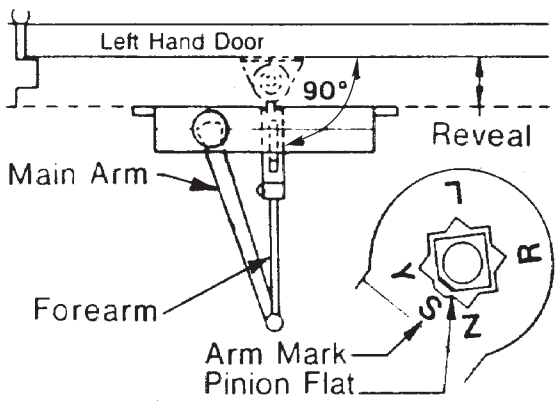

Holder Adjusting Nut Up

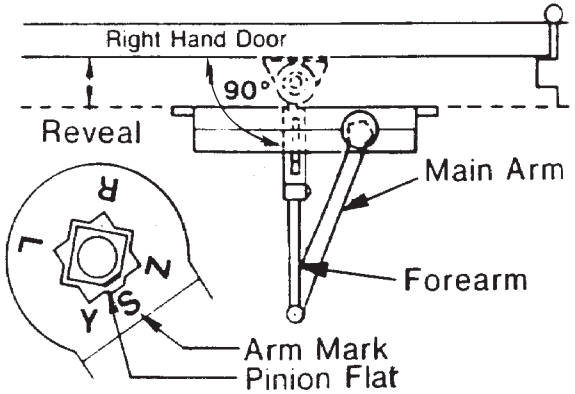

Holder Adjusting Nut Down

J8000H Series Door Closer
Top Jamb Hold Open Application With 8148 Drop Plate
J8100H, J8300H, and J8500H
Sizes 1 thru 6

Norton
ASSA ABLOY
www.nortondoorcontrols.com

TEMPLATE NUMBER	DATE
7380-0156	09-08