Copyright © 2022, ASSA ABLOY Accessories and Door Controls Group, Inc. All rights reserved.
Reproduction in whole or in part without the express written permission of ASSA ABLOY Accessories and Door Controls Group, Inc. is prohibited.

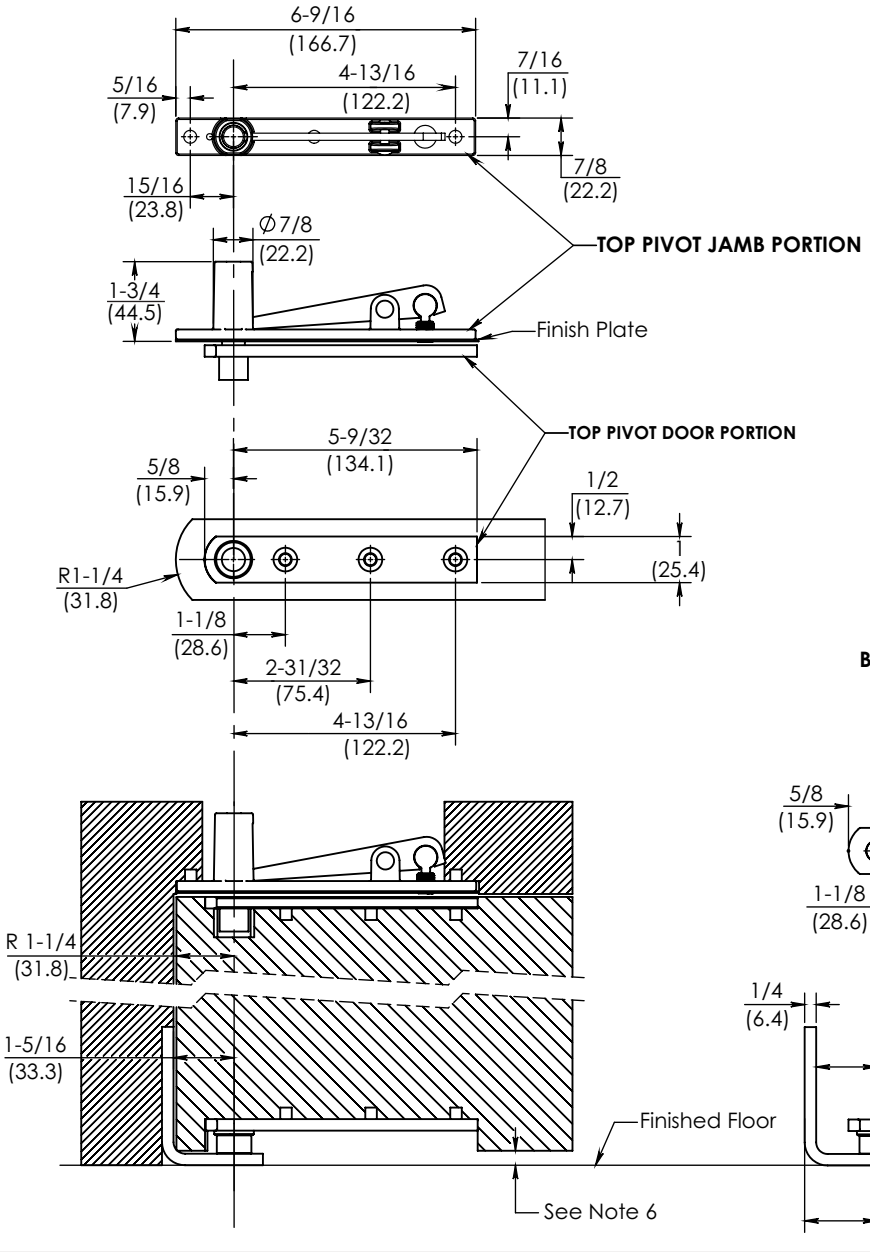

REINFORCEMENTS IN FRAME FOR TOP PIVOT

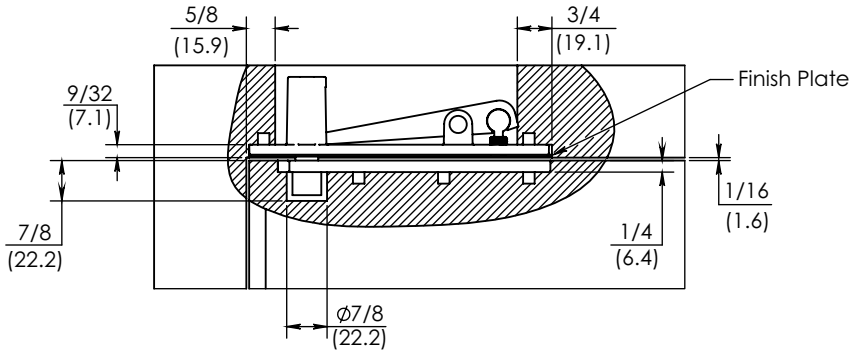

NOTES:

1. Do not scale drawing.
2. It is the door and frame manufacturers' responsibility to check the hardware schedule and prepare doors and frames.
3. Pivots drilled for 1/4-20 x 3/4" FHMS or #14 x 1-1/2" FHWS.
4. Suitable reinforcing by others.
5. Door radius to be 1-1/4" (31.75).
6. 5/16" (7.9) min., 3/4" (19) max. clearance. If more clearance is needed, longer spindle is required.
7. All dimensions are in inches (mm).

BOTTOM PIVOT DOOR PORTION

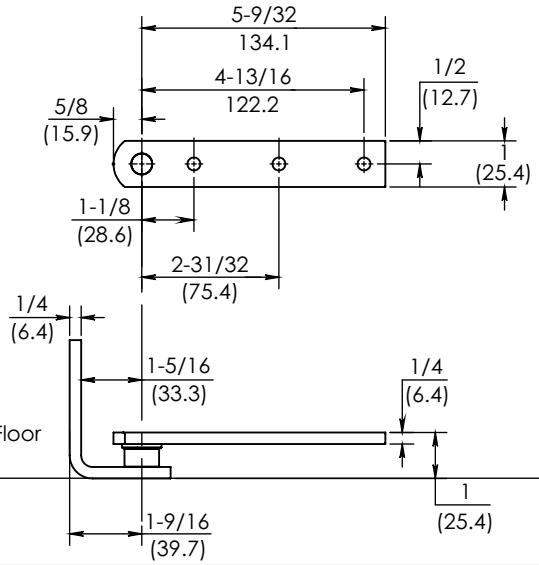

BOTTOM PIVOT FLOOR PORTION

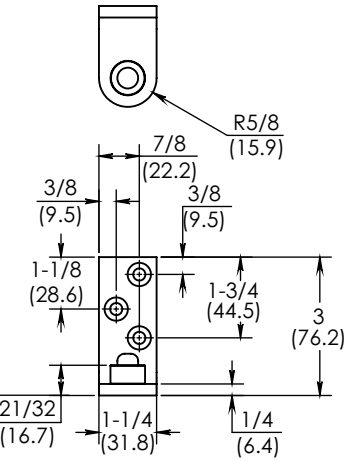

127-3/4" Pivot Set
Center Hung

NORTON RIXSON
ASSA ABLOY

TEMPLATE NUMBER	REV	DATE
PS30210	1	03/22

Approved 2022-03-25