Copyright © 2008, 2023, ASSA ABLOY Accessories and Door Controls Group, Inc. All rights reserved.
Reproduction in whole or in part without the express written permission of ASSA ABLOY Accessories and Door Controls Group, Inc. is prohibited.

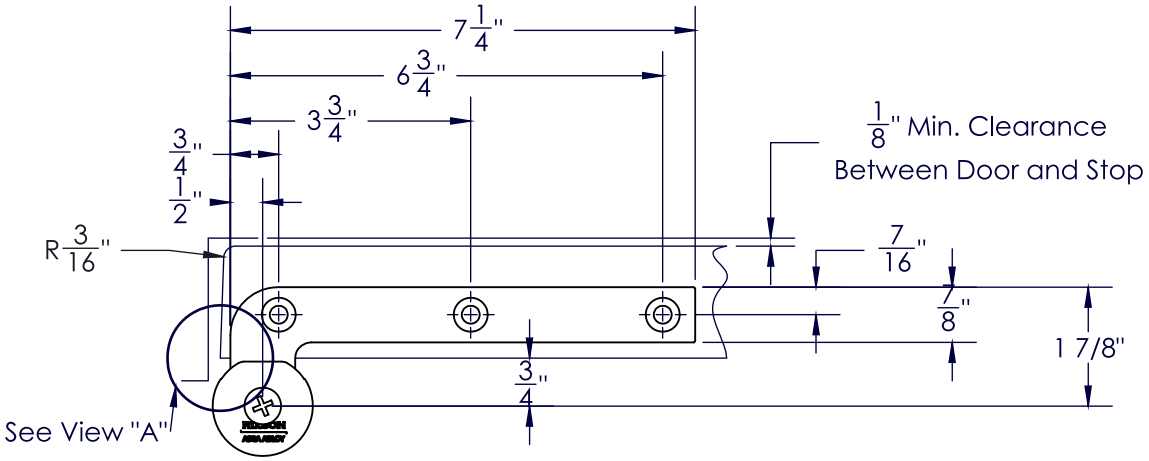

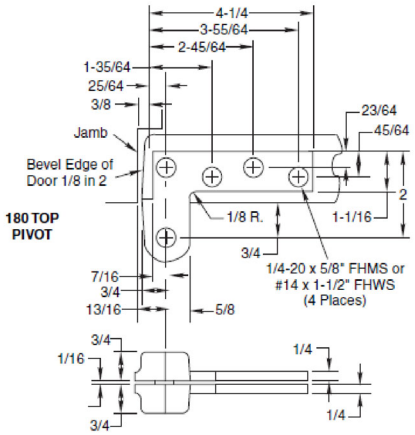

Notes:
1. Do not scale drawing.
2. Right hand shown.
3. Suitable reinforcing by others.
4. Pivots drilled for 1/4-20 x 3/4" FHMS or #14 x 1-1/2" FHWS.
5. Maximum degree of opening 180°, trim permitting.
6. All dimensions are in inches.

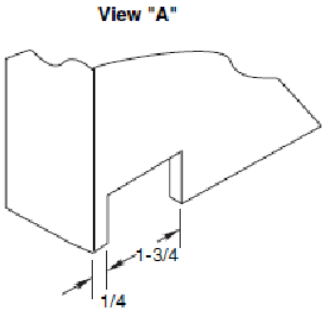

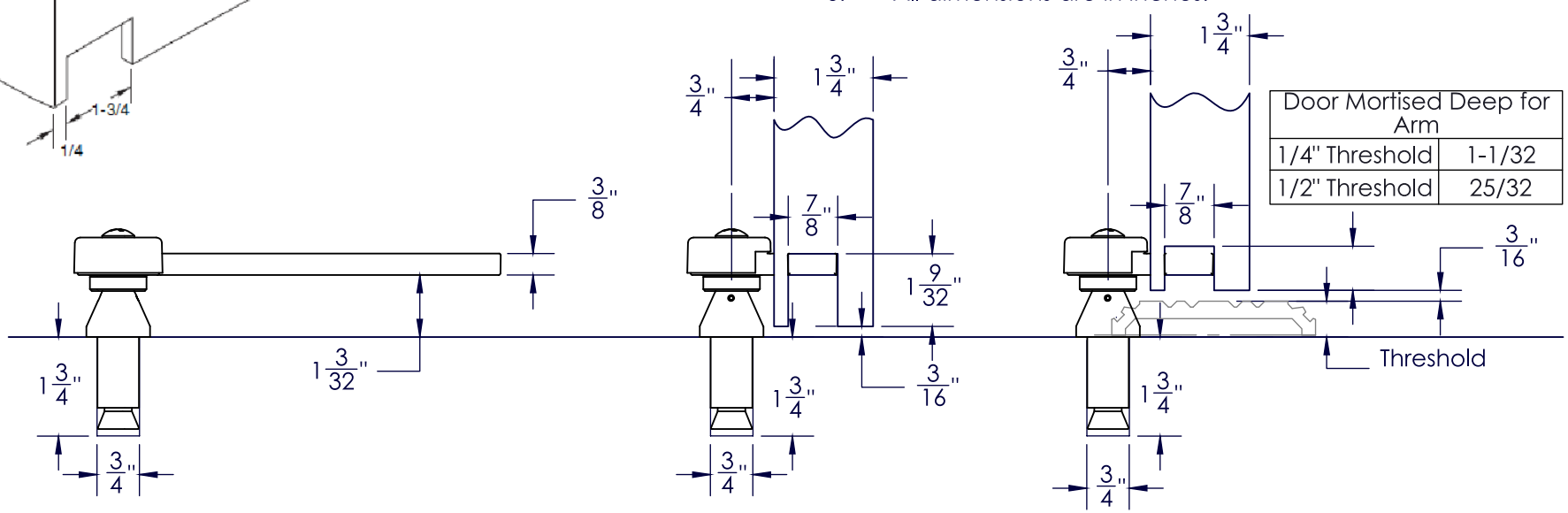

Door Mortised Deep for Arm	
1/4" Threshold	1-1/32
1/2" Threshold	25/32

173 Pivot Set
3/4" Offset

Approved 2023-12-15

NORTON RIXSON
ASSA ABLOY

TEMPLATE NUMBER	REV	DATE
PS30700	2	11/23