Copyright © 1999, 2009, 2021, ASSA ABLOY Accessories and Door Controls Group, Inc. All rights reserved.
Reproduction in whole or in part without the express written permission of ASSA ABLOY Accessories and Door Controls Group, Inc. is prohibited.

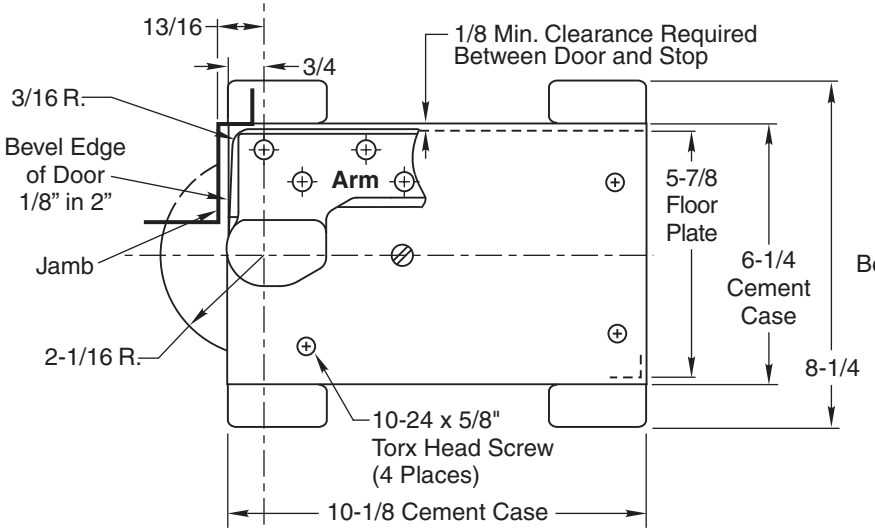

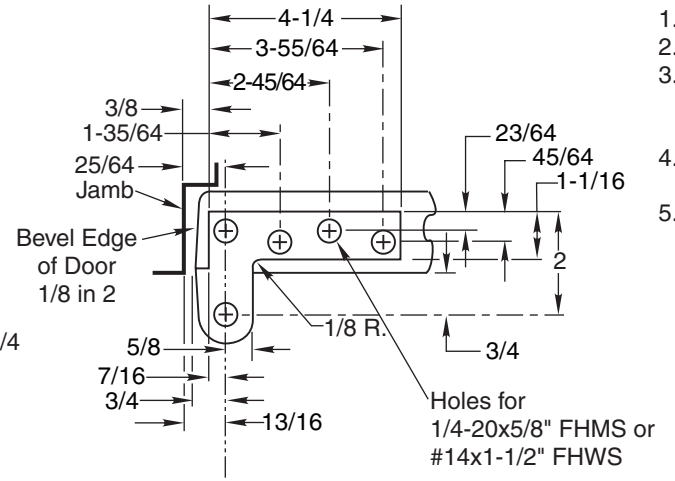

Note:

1. Do not scale drawing.
2. Right hand shown.
3. If vertical adjustment is required two 1/16" shims are provided. Place shims between arm and arm bearing washer.
4. Furnished for doors set back 1/16". For other door conditions specify set back.
5. All dimensions given in inches. Metric = inch x 25.4.

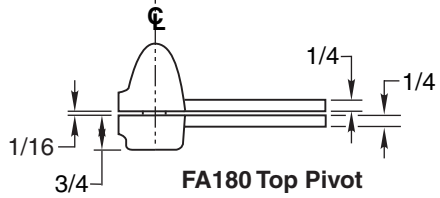

FA180 Top Pivot

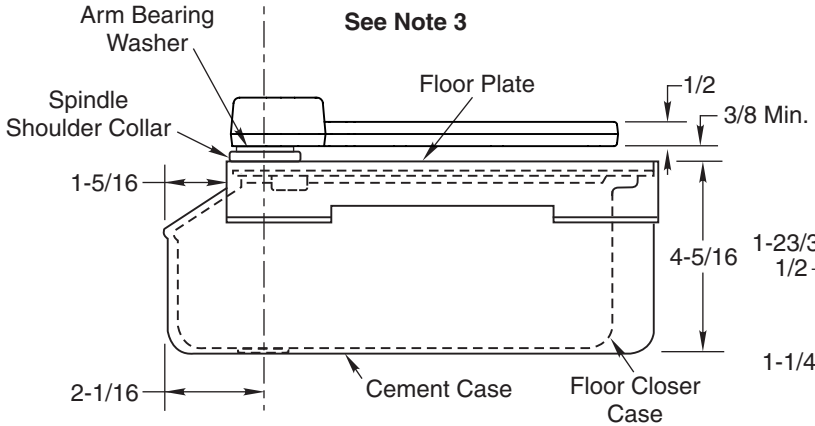

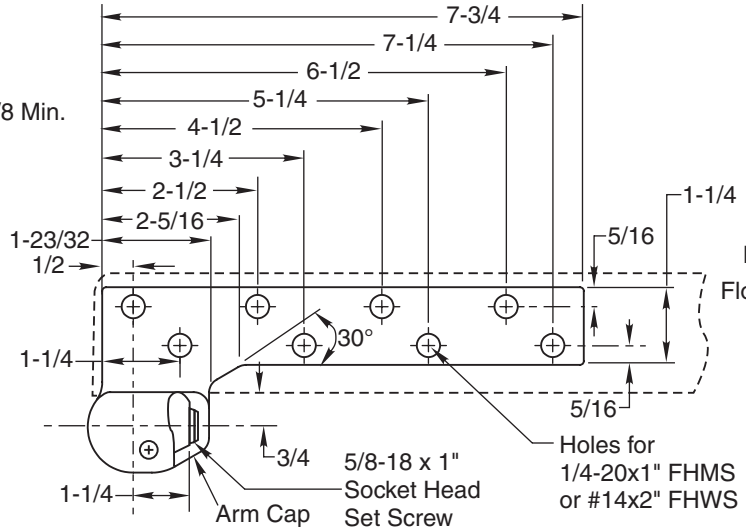

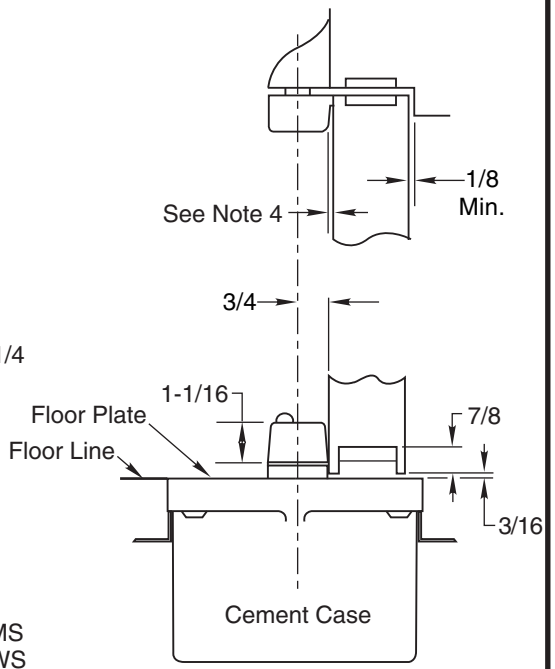

SEC25 & SEC27 Floor Closer
3/4" Offset

NORTON RIXSON
ASSA ABLOY

TEMPLATE NUMBER	REV	DATE
OS10500	3	01/22

Approved 2022-06-20