Copyright © 2023, 2024, ASSA ABLOY Accessories and Door Controls Group, Inc. All rights reserved.
Reproduction in whole or in part without the express written permission of ASSA ABLOY Accessories and Door Controls Group, Inc. is prohibited.

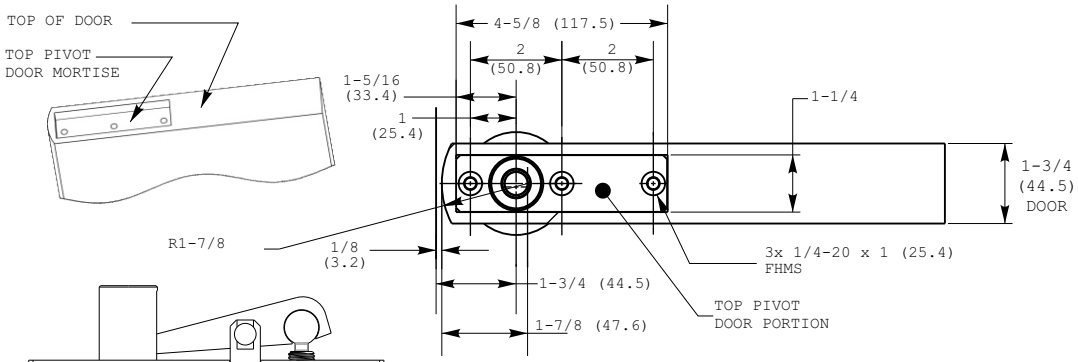

SECTION D-D

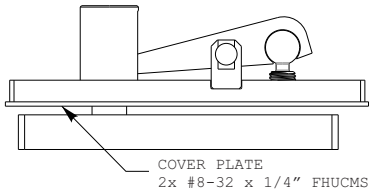

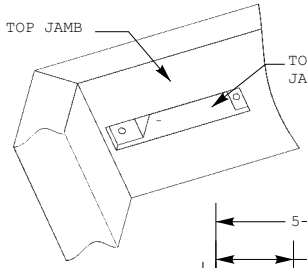

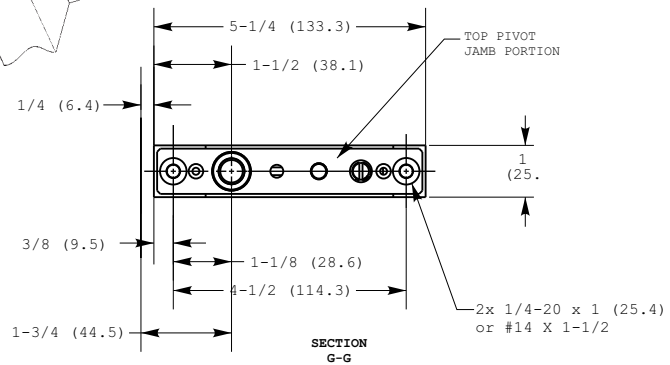

SECTION G-G

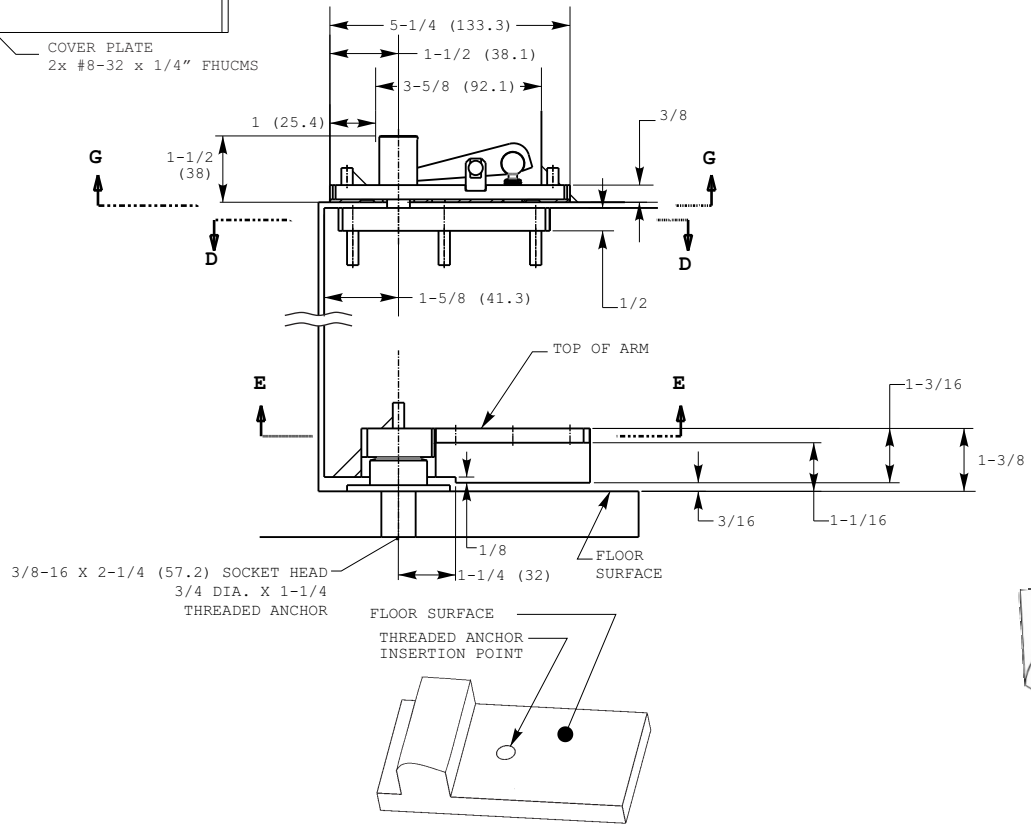

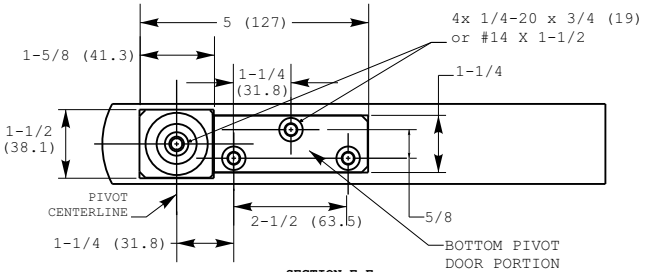

SECTION E-E

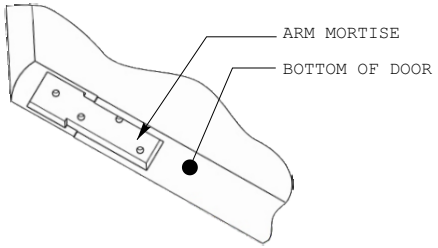

Model 270 Center Pivot Set

NORTON RIXSON
ASSA ABLOY

TEMPLATE NUMBER	REV	DATE
PS27003	2	12/24

Approved 2024-12-13