Copyright © 2005, 2009, 2021, ASSA ABLOY Accessories and Door Controls Group, Inc. All rights reserved.
Reproduction in whole or in part without the express written permission of ASSA ABLOY Accessories and Door Controls Group, Inc. is prohibited.

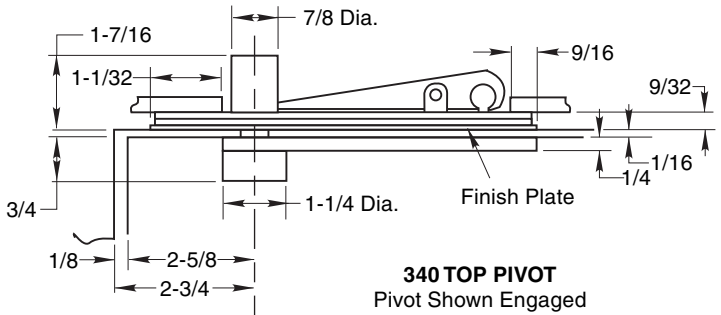

340 TOP PIVOT
Pivot Shown Engaged

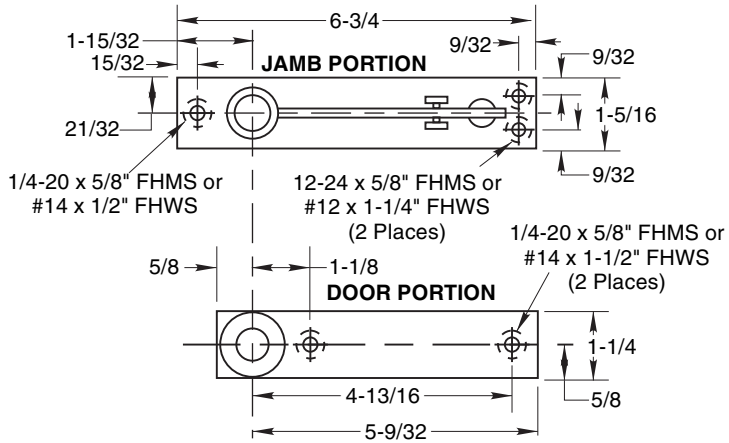

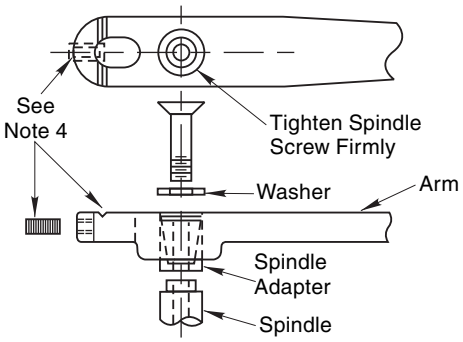

Door Mortised Deep for Arm	A	B
1/4 Threshold	1-13/16	1-1/8
1/2 Threshold	1-9/16	7/8

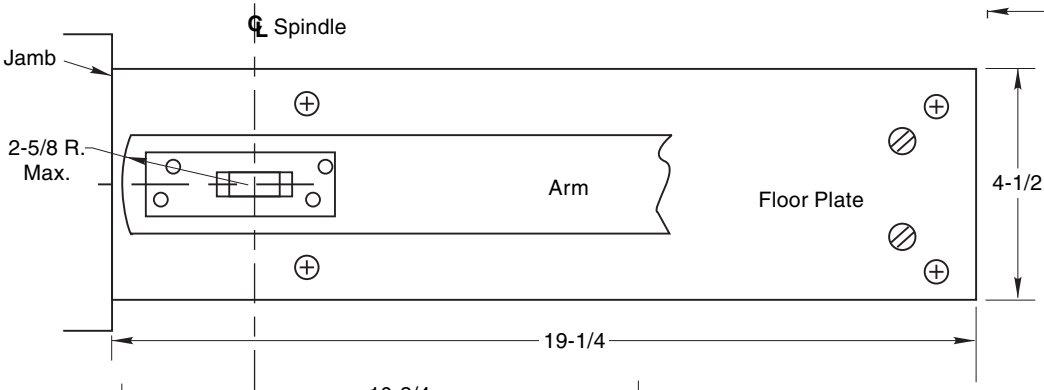

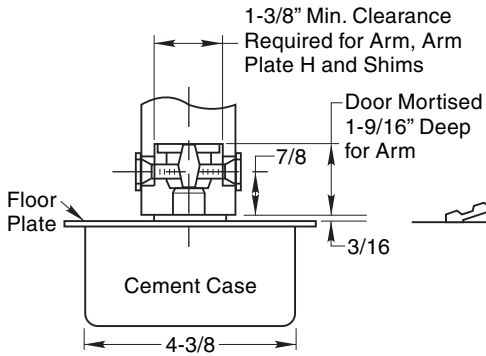

WITH FLOOR PLATE
Set Cement Case Flush with Finished Floor

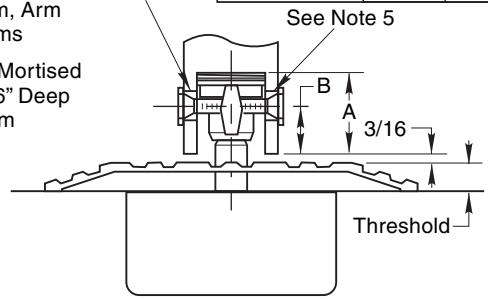

WITH THRESHOLD
Set Cement Case Flush with Finished Floor

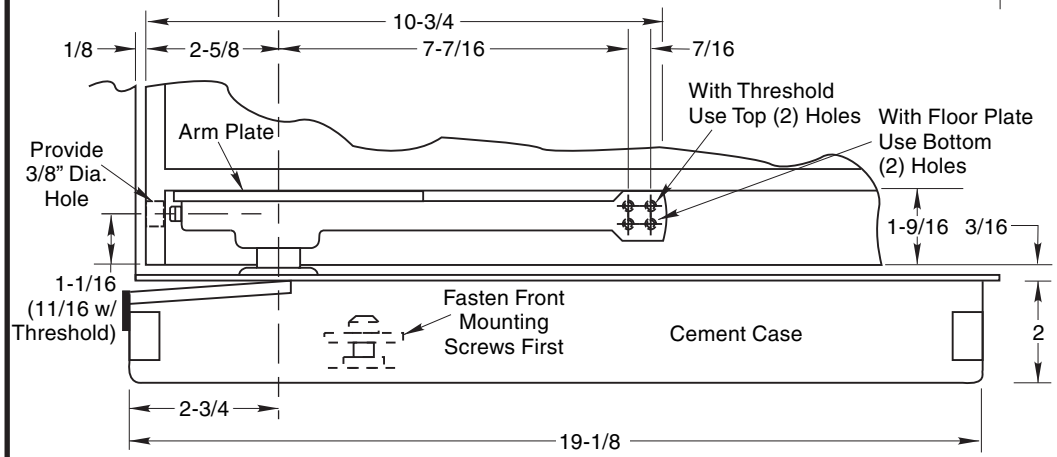

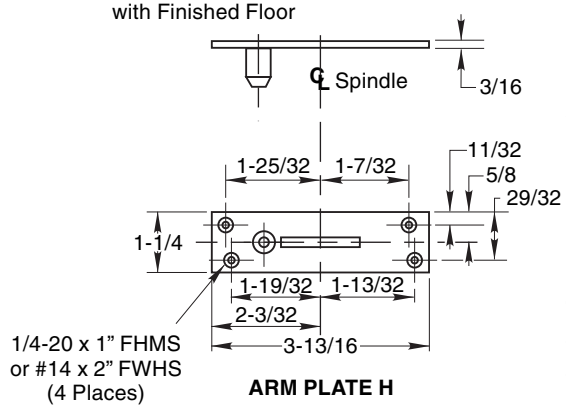

ARM PLATE H

Notes:
1. Do not scale drawing.
2. Suitable reinforcing by others.
3. Norton Rixson design threshold available on request.
4. Tighten adjusting screw to notched "V" line on arm to acquire standard initial location of door. Screw moves door towards and away from jamb to equalize door clearances.
5. Provide 5/8" dia. holes for alignment screws (2 places).
6. Do not remove grind plate until closer is installed.
7. External stop by others required.
8. All dimensions given in inches.
9. Auxiliary stop required.

50 Series Floor Closer
Center Hung

NORTON RIXSON
ASSA ABLOY

TEMPLATE NUMBER	REV	DATE
CH20400	3	12/21

Approved 2023-12-15