Copyright © 2022, ASSA ABLOY Accessories and Door Controls Group, Inc. All rights reserved.
Reproduction in whole or in part without the express written permission of ASSA ABLOY Accessories and Door Controls Group, Inc. is prohibited.

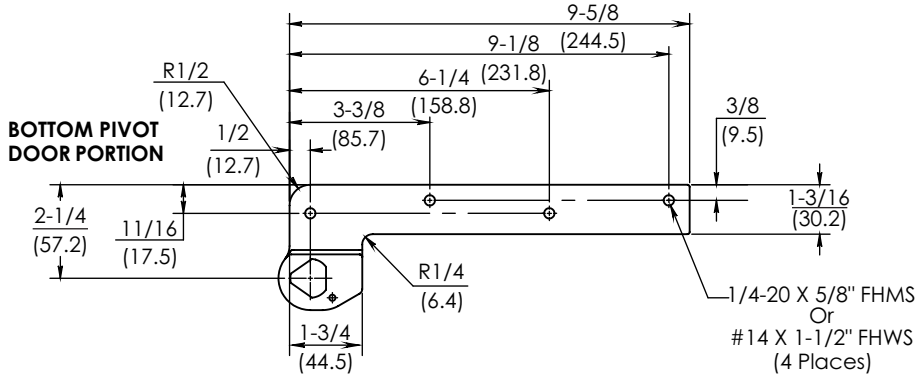

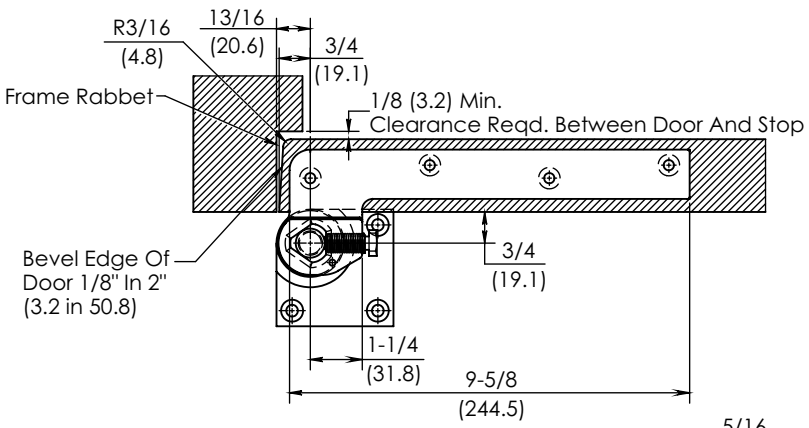

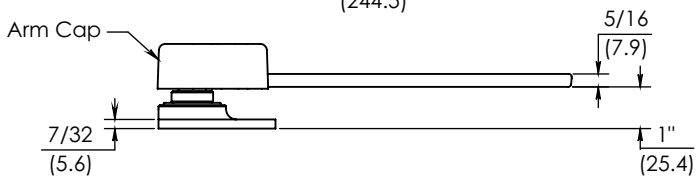

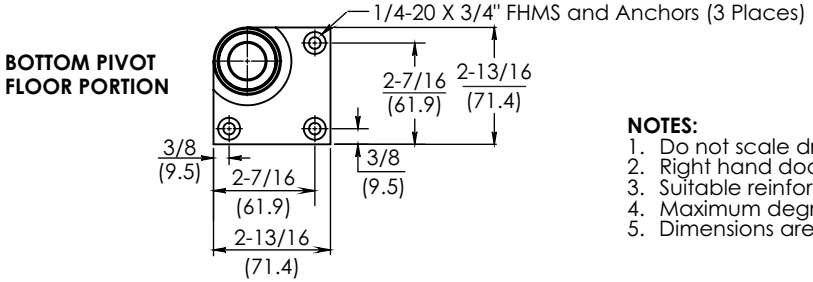

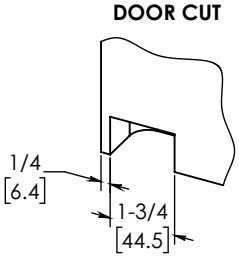

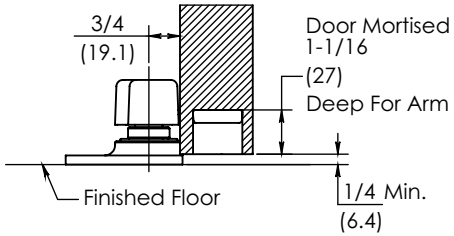

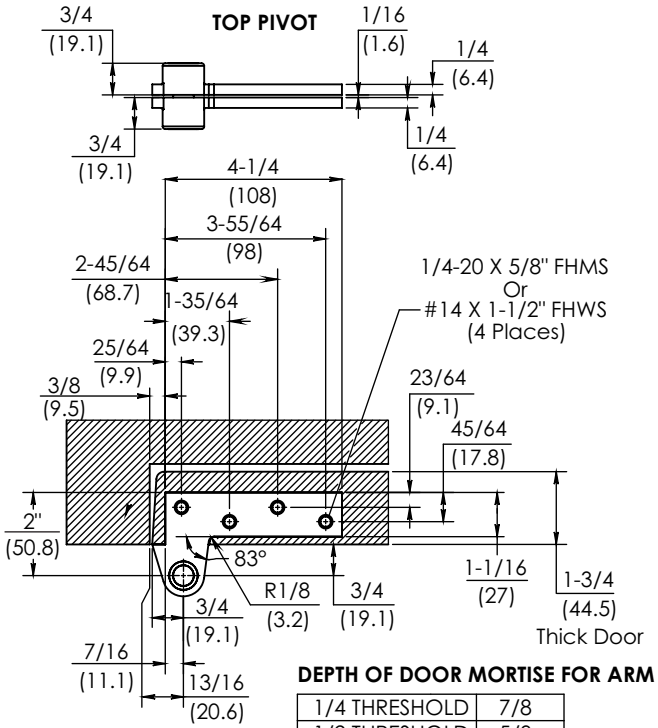

DEPTH OF DOOR MORTISE FOR ARM

1/4 THRESHOLD	7/8
1/2 THRESHOLD	5/8

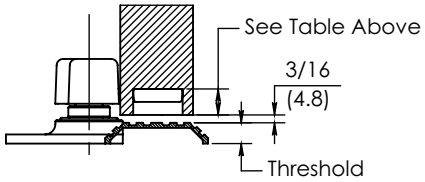

DOOR WITH THRESHOLD

NOTES:
1. Do not scale drawing.
2. Right hand door shown. Left hand opposite.
3. Suitable reinforcing by others.
4. Maximum degree of opening is 180°, trim permitting.
5. Dimensions are in inches (mm).

CG0147 Pivot Set
3/4" Offset Hung

NORTON RIXSON
ASSA ABLOY

TEMPLATE NUMBER	REV	DATE
PS30301	1	02/22

Approved 2022-03-25