Copyright © 2006, 2009, 2022, ASSA ABLOY Accessories and Door Controls Group, Inc. All rights reserved.
Reproduction in whole or in part without the express written permission of ASSA ABLOY Accessories and Door Controls Group, Inc. is prohibited.

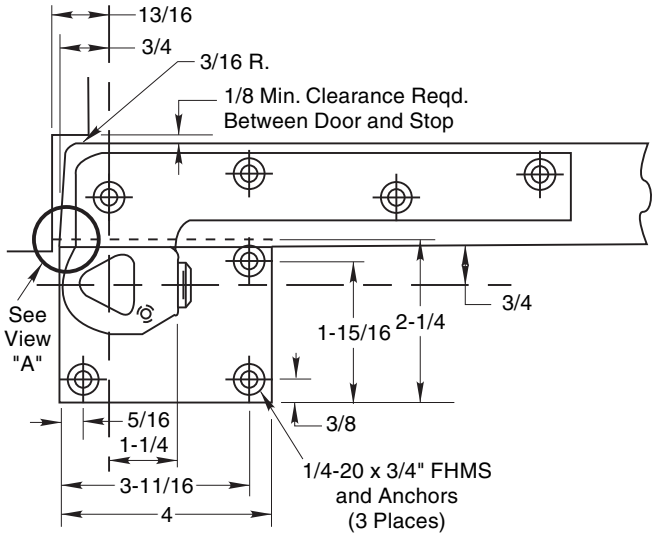

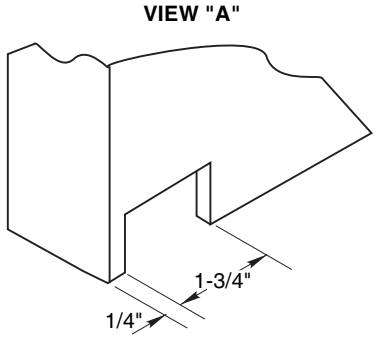

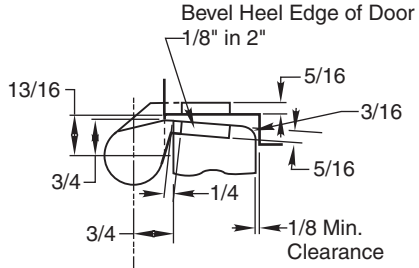

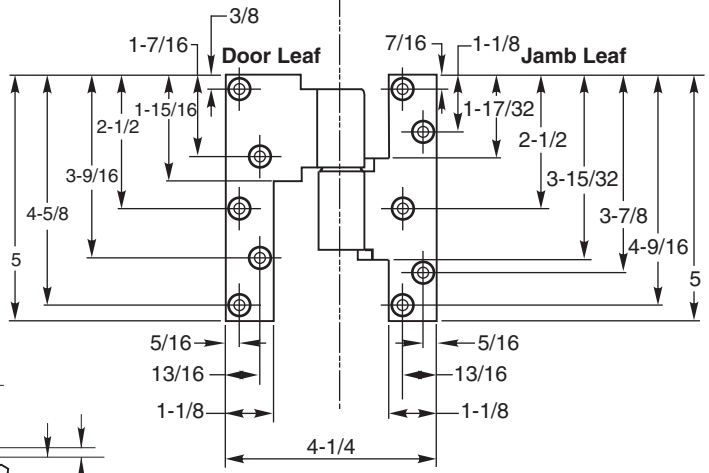

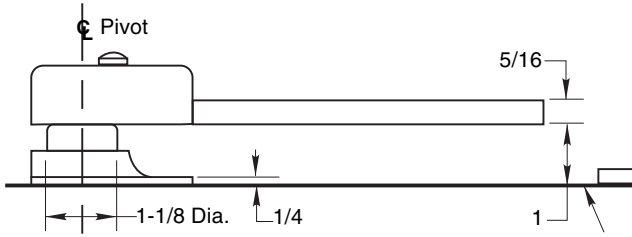

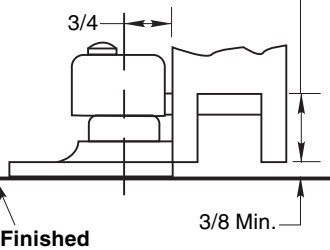

Door Mortised "A" Deep for Arm

	"A"
1/4 Threshold	7/8
1/2 Threshold	5/8

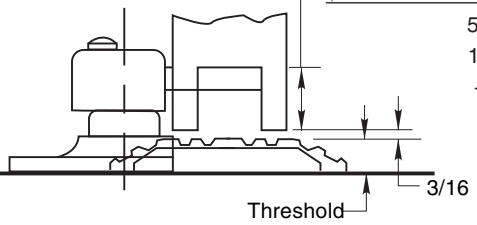

WITH THRESHOLD

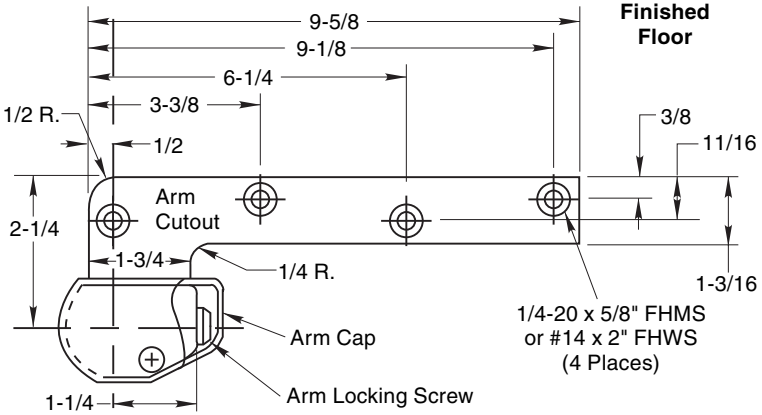

Notes:

1. Do not scale drawing.
2. Right hand shown.
3. Suitable reinforcing by others.
4. Maximum degree of opening 180°, trim permitting.
5. All dimensions are in inches. Metric = 25.4 x inch.
6. Minimum two M190 Intermediate Pivots required. Add more for taller doors.
7. Place 1st Intermediate Pivot as close as possible to top of door.
8. Place other Intermediate Pivot equidistant.
9. Top pivot: maximum distance for the top of the door is 10". Arch top doors must be exactly at the top of the flat side of the frame.

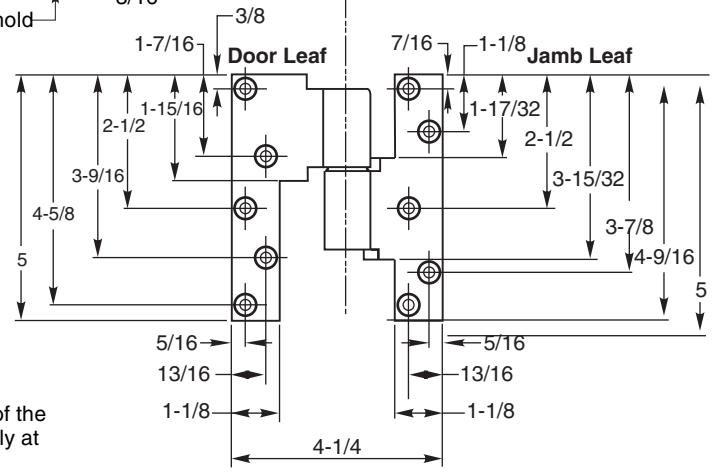

F547 Pivot Set
3/4" Offset
For Use With Arch Top Doors Or Overhead Concealed Closers

NORTON RIXSON
ASSA ABLOY

TEMPLATE NUMBER	REV	DATE
PS30555	3	01/22

Approved 2023-12-15