PTR180 INSTALLATION TEMPLATE

NOTES:

1. USE TRANSFER CASE HOUSING AS DRILLING TEMPLATE.
2. ONLY STRANDED WIRES TO BE EMPLOYED.
3. SPRING CONDUIT FITS WIRE BUNDLES UP TO 5/16" THICK.
4. USE CARE WHEN INSERTING WIRES THROUGH THIS DEVICE.
5. RECTANGULAR CUT-OUT IS 11/16" DEEP (MIN.) FOR WOOD FRAME.
6. WIRES SHOULD BE LABELED.
7. SIZE AND NUMBER OF WIRES MUST COMPLY WITH THE NATIONAL ELECTRICAL CODE, NFPA, AND LOCAL ELECTRICAL CODES.
8. THIS DEVICE IS INTENDED FOR LOW VOLTAGE USE ONLY (30 VAC, 42.5 VDC, 10 WATTS MAX.)

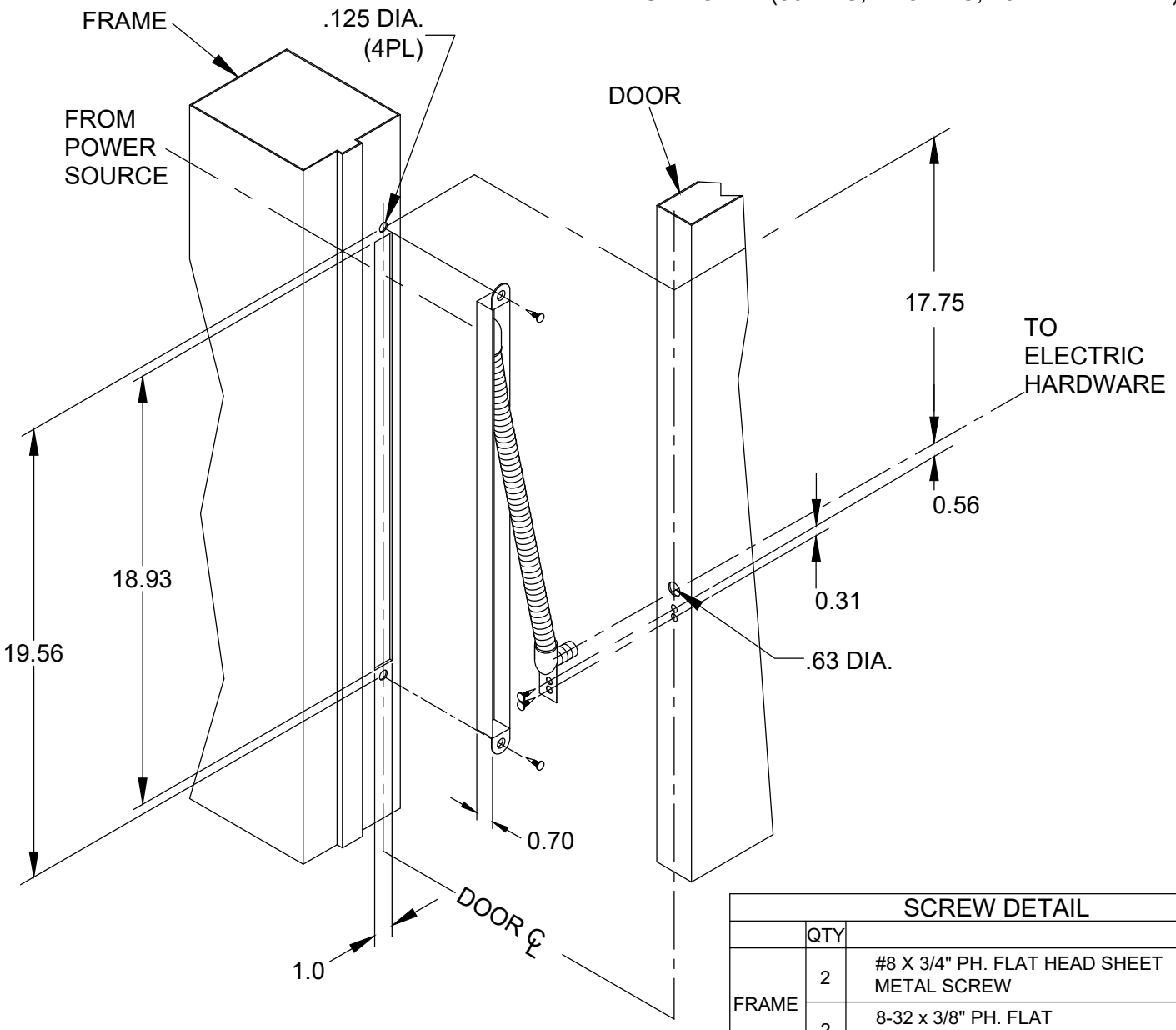

SCREW DETAIL		
	QTY	
FRAME	2	#8 X 3/4" PH. FLAT HEAD SHEET METAL SCREW
	2	8-32 x 3/8" PH. FLAT HEAD, UC, MACHINE SCREW
DOOR	2	6-32 X 1/4" PAN HEAD MACHINE SCREW

PTR180 TEMPLATE-05.DWG

ABH MANUFACTURING INC.®
www.abhmfg.com
E-mail: abhinfo@abhmfg.com
Architectural Builders Hardware Mfg., Inc.
1222 Ardmore Ave., Itasca, IL 60143
630.875.9900; FAX 800.9FAXABH (932.9224)

© 2021 ABH Mfg., Inc.
printed in USA

PTR180

REVISED 11/05/21