Architectural
Door Accessories

ASSA ABLOY

Pemko 95" WIDE THROW HALF SURFACE HD

The global leader in door opening solutions

LISTED DOOR HINGE 76Y2

BHMA CERTIFIED

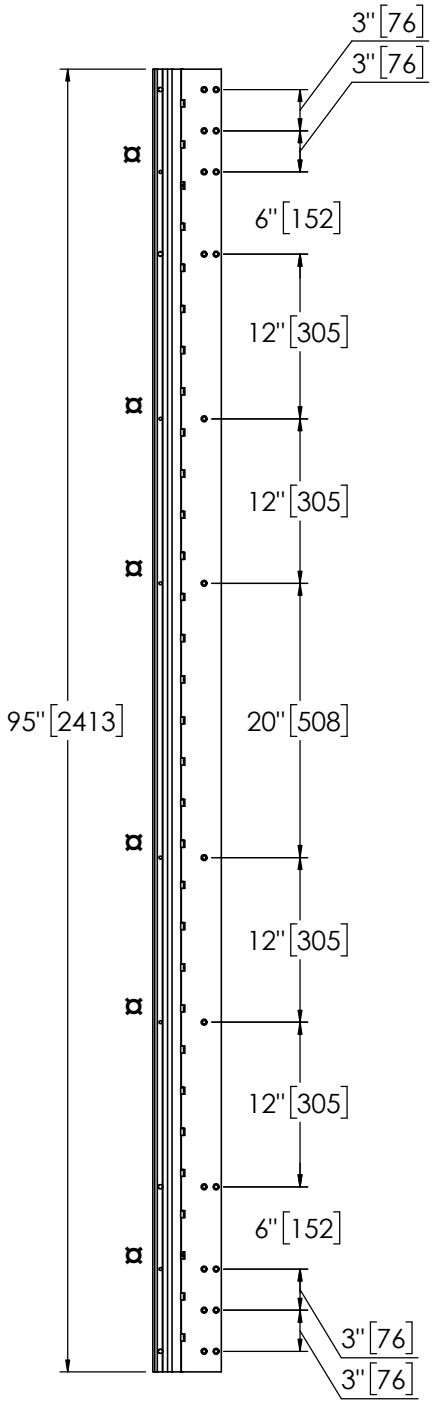

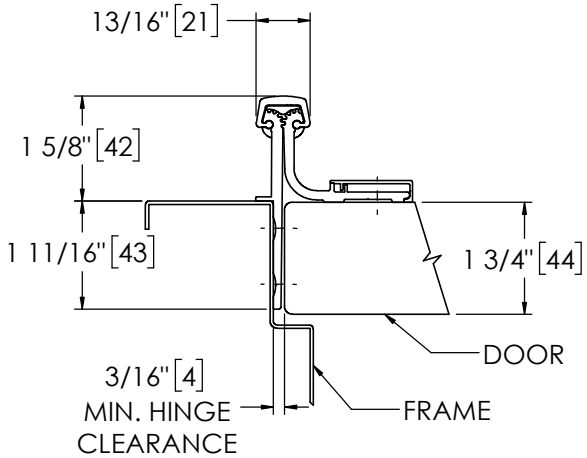

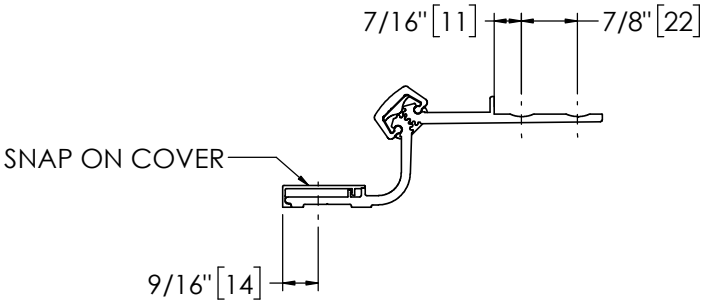

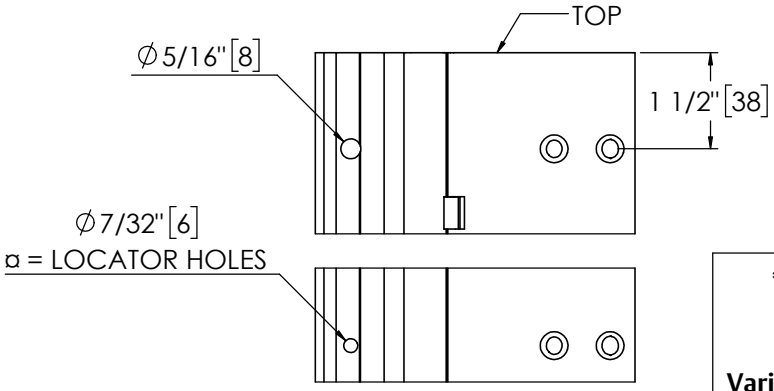

*** * CAUTION * ***
Due to Frame Installation Variations, Pre-drilling For Fasteners IS NOT Recommended

USA:
Ventura, CA 93003
Phone: 800.283.9988

Memphis, TN 38141
Phone: 800.824.3018

Canada:
Vancouver, BC V2T6W3
Phone: 877.535.7888

Toronto, ON L4K4T9
Phone: 877.535.7888

Copyright © 2018, Pemko Manufacturing Co., an ASSA ABLOY Group Company. All rights reserved.
Reproduction in whole or in part without the express written permission of Pemko Manufacturing Co. is prohibited

T - 559 - WT_HS95HD
REV1 - 12/18