Rixson® is a registered trademark of Yale Security Inc., an ASSA ABLOY Group company. Copyright© 1999, 2015, Yale Security Inc., an ASSA ABLOY Group company.
All rights reserved. Reproduction in whole or in part without the express written permission of Yale Security Inc. is prohibited.

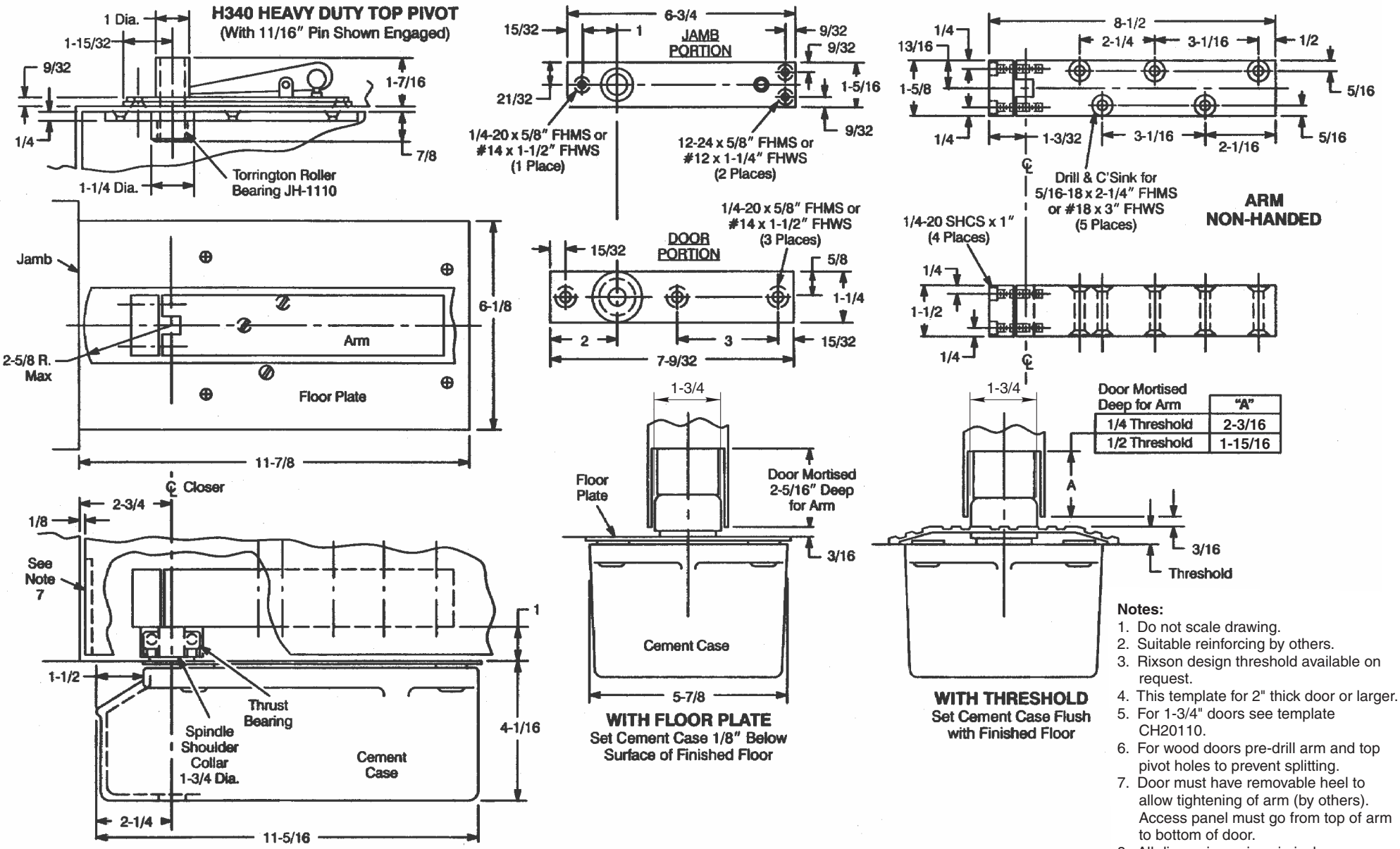

Door Mortised Deep for Arm	"A"
1/4 Threshold	2-3/16
1/2 Threshold	1-15/16

Notes:

1. Do not scale drawing.
2. Suitable reinforcing by others.
3. Rixson design threshold available on request.
4. This template for 2" thick door or larger.
5. For 1-3/4" doors see template CH20110.
6. For wood doors pre-drill arm and top pivot holes to prevent splitting.
7. Door must have removable heel to allow tightening of arm (by others). Access panel must go from top of arm to bottom of door.
8. All dimensions given in inches.

H28 Floor Closer
Single Acting, Center Hung
For Minimum 2" Thick Door

RIXSON
ASSA ABLOY
www.rixson.com

TEMPLATE NUMBER	DATE
CH20200	08-15