Rixson® is a registered trademark of Yale Security Inc., an ASSA ABLOY Group company. Copyright© 2005, 2008, Yale Security Inc., an ASSA ABLOY Group company.
All rights reserved. Reproduction in whole or in part without the express written permission of Yale Security Inc. is prohibited.

ASSA ABLOY is the global leader in door opening solutions, dedicated to satisfying end-user needs for security, safety and convenience.

OS10220

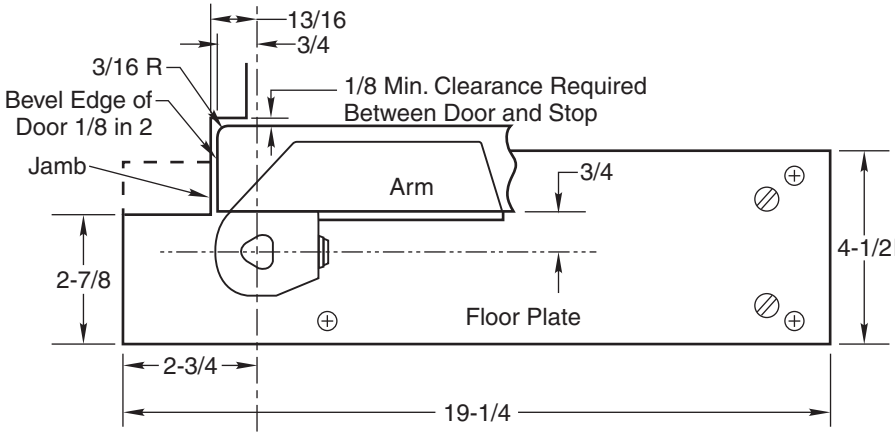

Where vertical adjustment is necessary two 1/16" thick shims are provided to be placed between arm & arm bearing washer.

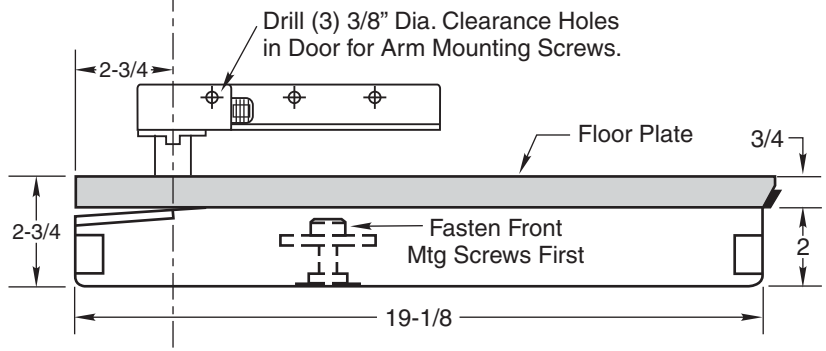

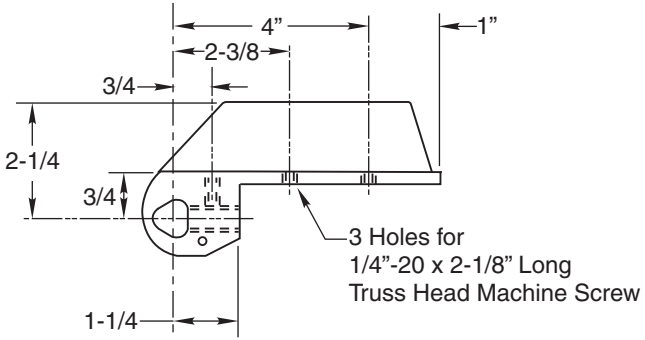

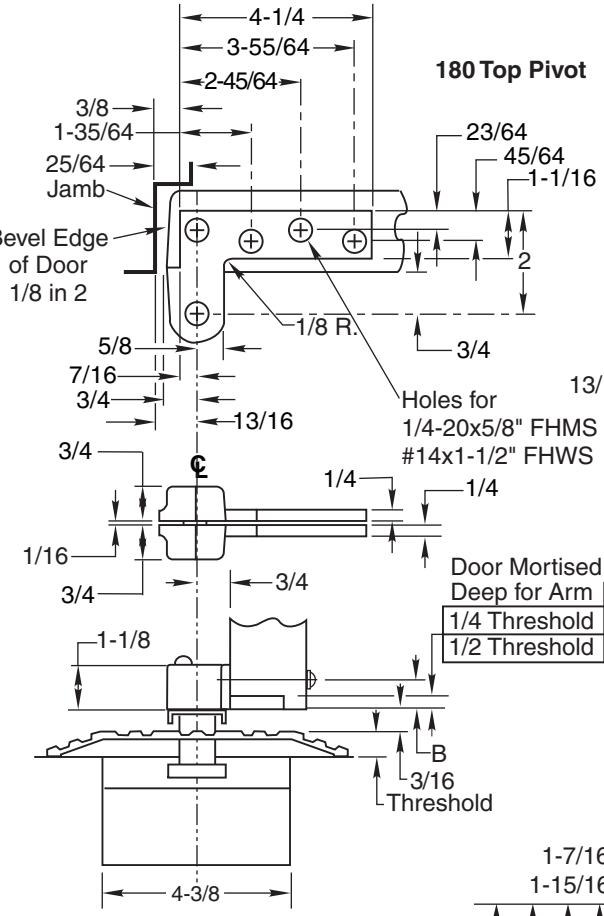

WITH THRESHOLD
Set Cement Case 3/4" Below Surface of Finished Floor

Notes:
1. Do not scale drawing.
2. Right Hand Shown.
3. Use only with 1-3/4" doors.
3. All dimensions given in inches. Conversion from inches to metric: inch x 25.4
4. Maximum 11/16" clearance with standard spindle. Closer mounted flush with finished floor.

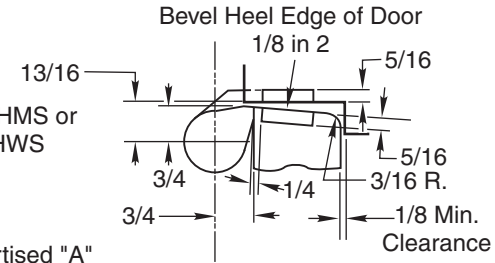

Door Mortised "A" Deep for Arm

	"A"	"B"
1/4 Threshold	9/16	15/16
1/2 Threshold	5/16	11/16

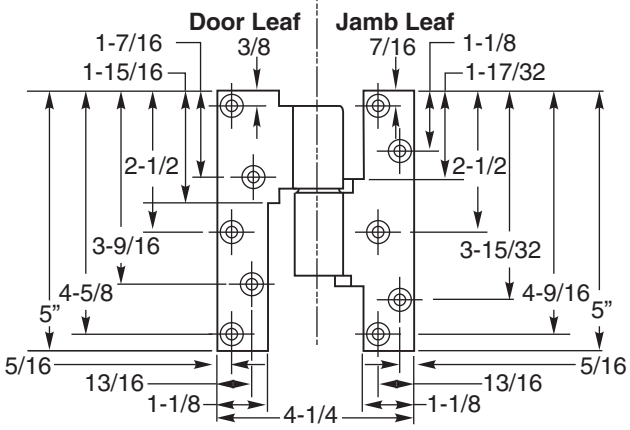

QT51 Removable Floor Closer
3/4" Offset
for Use with 1-3/4" Doors Only

RIXSON
ASSA ABLOY
www.rixson.com

TEMPLATE NUMBER	DATE
OS10220	12-08