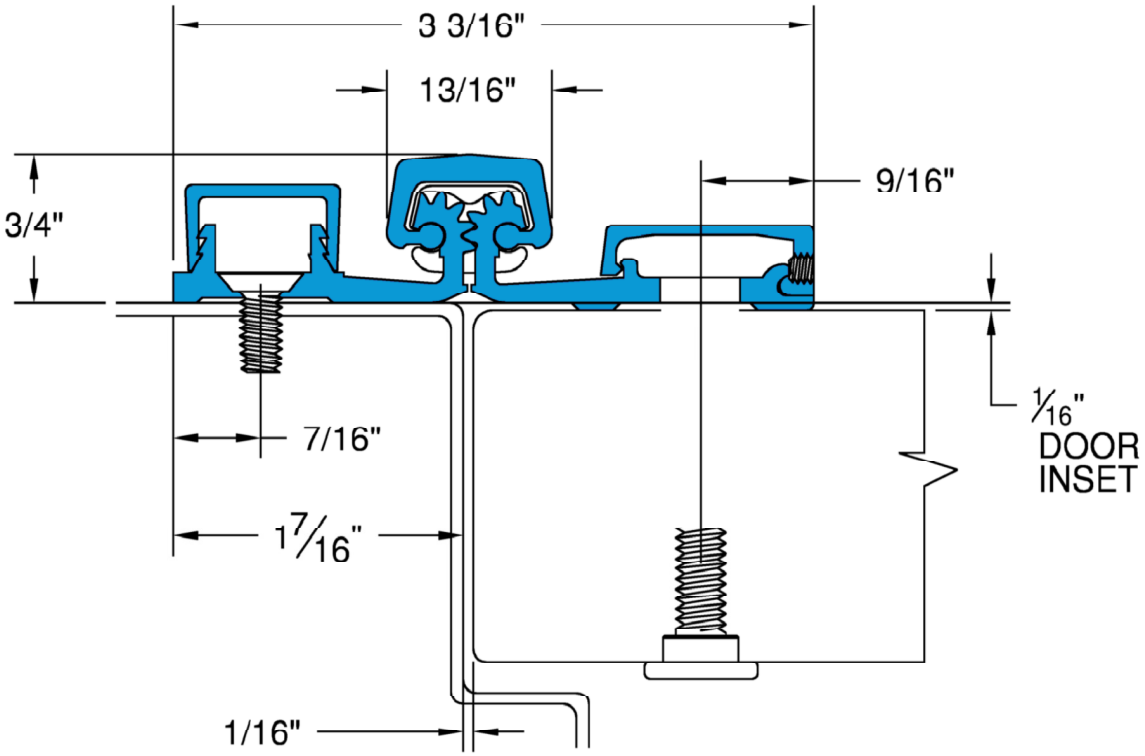

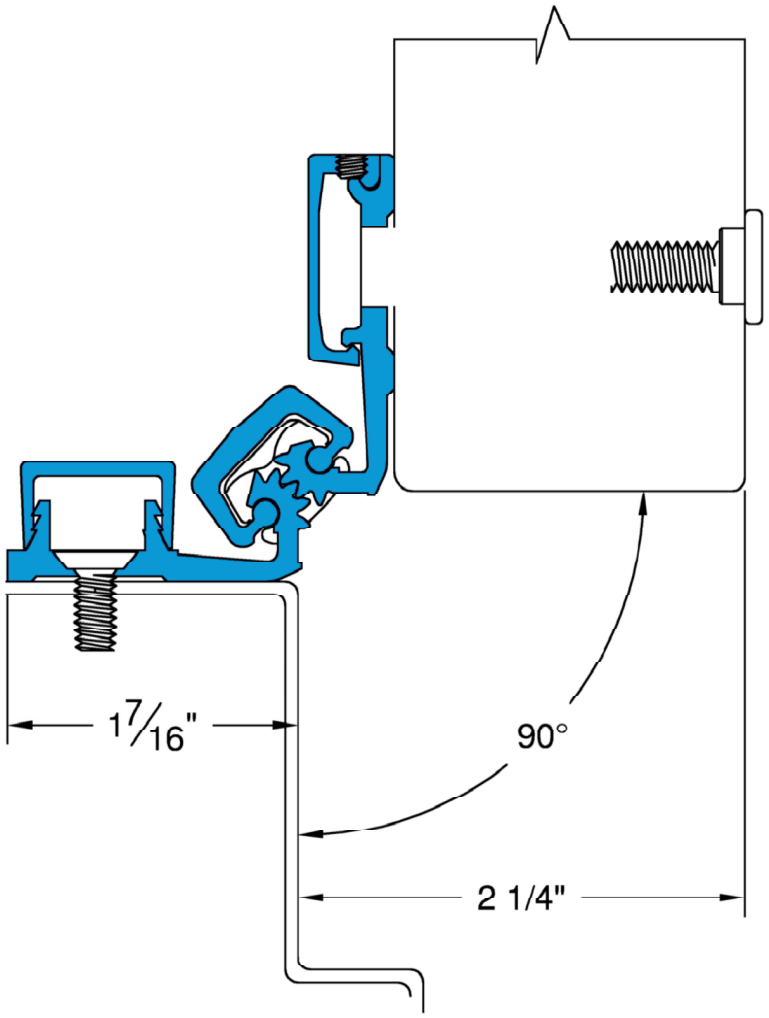

SELECT HINGES®
SELECT Products Limited
3258 Stadium Park Way
Kalamazoo, MI 49009
Ph: 800-423-1174 Fax: 800-423-7107
www.select-hinges.com

SL57 FULL SURFACE HINGE