# CUSTOM SCRM4550 DOUBLE-LIPPED STRIKE & RESCUE STOP COMBO

- **1-3/4" THICK DOOR**
- **⅛" INSET DOOR**
- **SCHLAGE MORTISE LOCK W / DEAD BOLT**
- **5-3/8" FRAME**

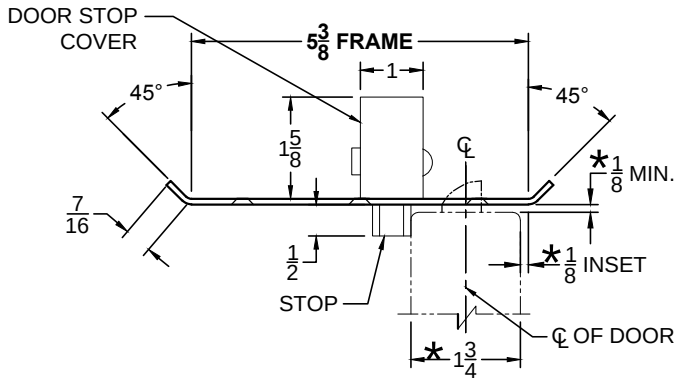


**TOP VIEW**

STOP IS SPRING LOADED MAKING PART NON-HANDED BUT INSTALLATION IS STILL HANDED

**ABH DOOR STOP COVER DIMENSIONS MAY NOT MATCH OTHER MANUFACTURERS**

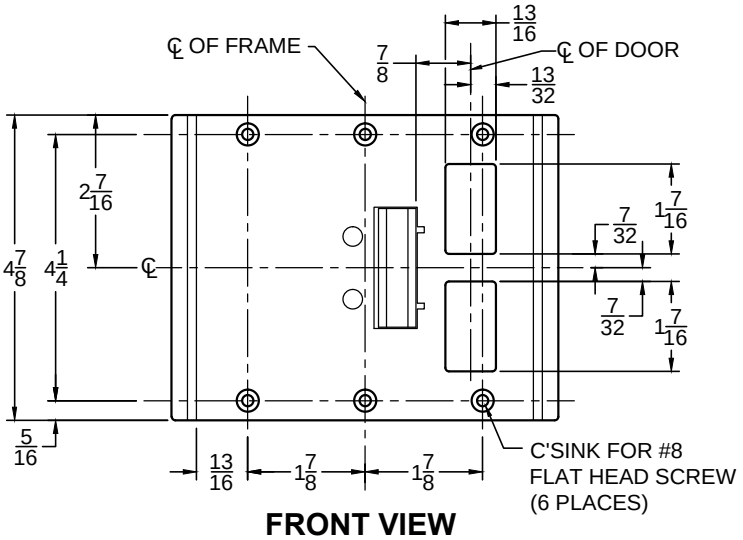


**FRONT VIEW**

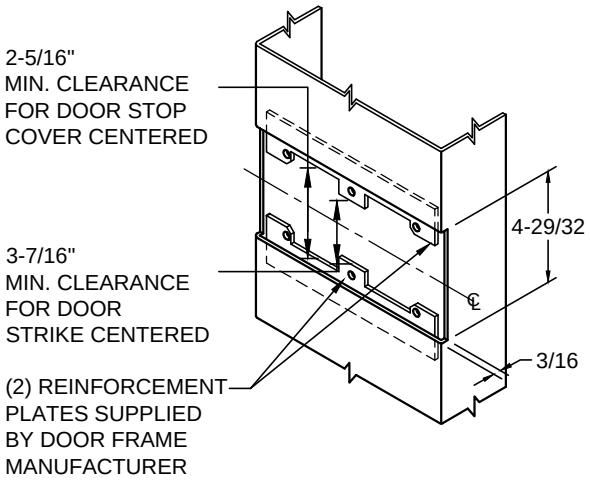


**CUT-OUT FOR METAL JAMB**

NOTE:

1. HORIZONTAL CENTERLINE OF PLATE TO MATCH HORIZONTAL CENTERLINE OF CUTOUT.
2. SCREWS- 8-32 X 3/8" UNDERCUT F.H.M.S.
3. R.H. DOOR SHOWN, L.H. OPPOSITE
4. DO NOT SCALE DRAWING.
5. FOR CUSTOM RESCUE DOOR STOP CONSULT FACTORY.

REINFORCEMENT:

WHEN INSTALLING IN METAL FRAME, REINFORCEMENT IS **NEEDED** WITH THIS PRODUCT, CUSTOMER OR MANUFACTURER TO SUPPLY FRAME REINFORCEMENT WITH LATCH BOLT CLEARANCE.

* = CRITICAL DIMENSION MUST BE FOLLOWED

SP-CR4510 5.375x4.875 SCHLAGE.DWG


ABH®
www.abhmfg.com
E-mail: abhinfo@abhmfg.com
Architectural Builders Hardware Mfg., Inc.
1222 Ardmore Ave., Itasca, IL 60143
630.875.9900; FAX 800.9FAXABH (932.9224)



©2016 ABH Mfg., Inc.
printed in USA


SP-CR4510

ISSUED 11-21-16