CUSTOM SCRM4550 DOUBLE-LIPPED STRIKE & RESCUE STOP COMBO

- **1-3/4" THICK DOOR**
- **1/8" INSET DOOR**
- **SCHLAGE MORTISE LOCK W / DEAD BOLT**
- **11-3/4" FRAME**

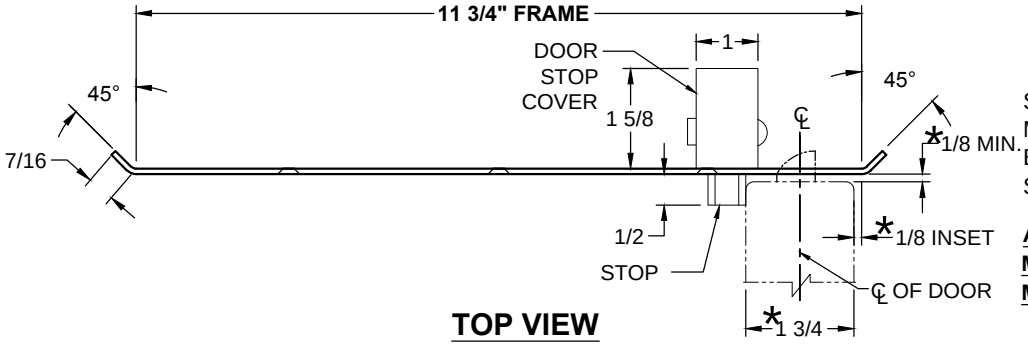

STOP IS SPRING LOADED MAKING PART NON-HANDED BUT INSTALLATION IS STILL HANDED

ABH DOOR STOP COVER DIMENSIONS MAY NOT MATCH OTHER MANUFACTURERS

TOP VIEW

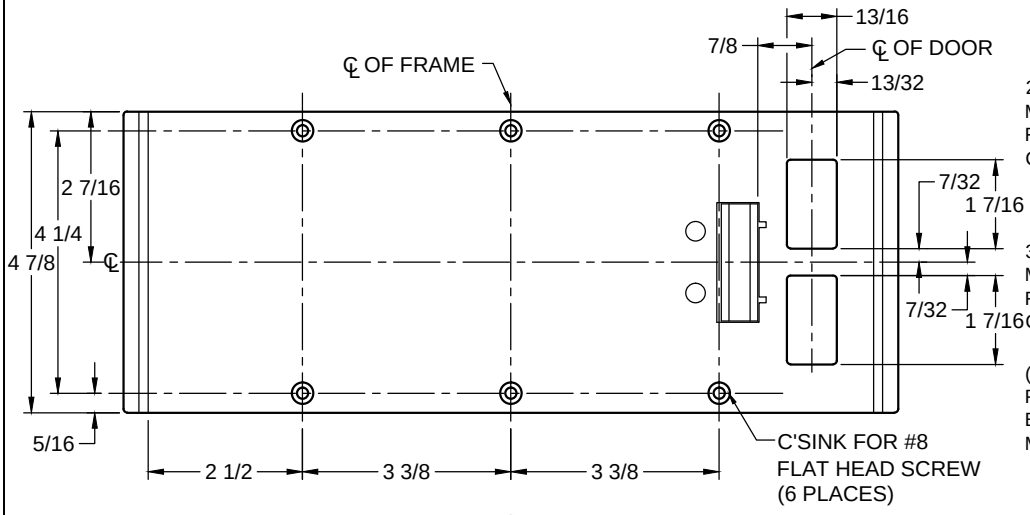

FRONT VIEW

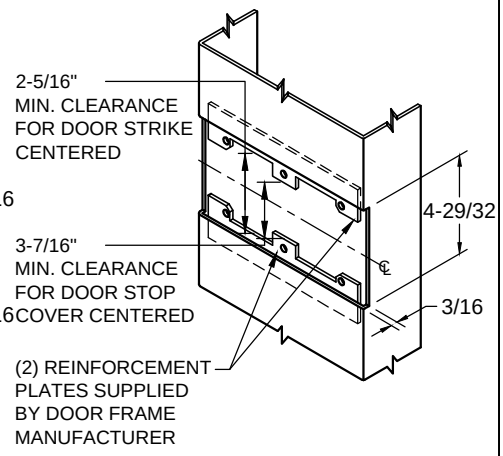

CUT-OUT FOR METAL JAMB

NOTE:

1. HORIZONTAL CENTERLINE OF PLATE TO MATCH HORIZONTAL CENTERLINE OF CUT-OUT.
2. SCREWS - 8-32 x 3/8" UNDERCUT F.H.M.S.
3. R.H. DOOR SHOWN, L.H. OPPOSITE
4. DO NOT SCALE DRAWING.
5. FOR CUSTOM RESCUE DOOR STOP CONSULT FACTORY.

REINFORCEMENT:

WHEN INSTALLING IN METAL FRAME, REINFORCEMENT IS **NEEDED** WITH THIS PRODUCT, CUSTOMER OR MANUFACTURER TO SUPPLY FRAME REINFORCEMENT WITH LATCH BOLT CLEARANCE.

* = CRITICAL DIMENSION MUST BE FOLLOWED

SP-CR4568 11.750x4.875 SCHLAGE.DWG

ABH®
www.abhmfg.com
E-mail: abhinfo@abhmfg.com
Architectural Builders Hardware Mfg., Inc.
1222 Ardmore Ave., Itasca, IL 60143
630.875.9900; FAX 800.9FAXABH (932.9224)

©2016 ABH Mfg., Inc.
printed in USA

SP-CR4568

ISSUED 12-19-16