SP-CR699 CUSTOM DOUBLE LIPPED STRIKE AND RESCUE STOP

FOR 1-3/4" DOOR, 1/8" INSET, CYLINDRICAL LATCH, 6-1/2" FRAME

ABH DOOR STOP COVER DIMENSIONS MAY NOT MATCH OTHER MANUFACTURERS

STOP IS SPRING LOADED MAKING PART NON-HANDED BUT INSTALLATION IS STILL HANDED

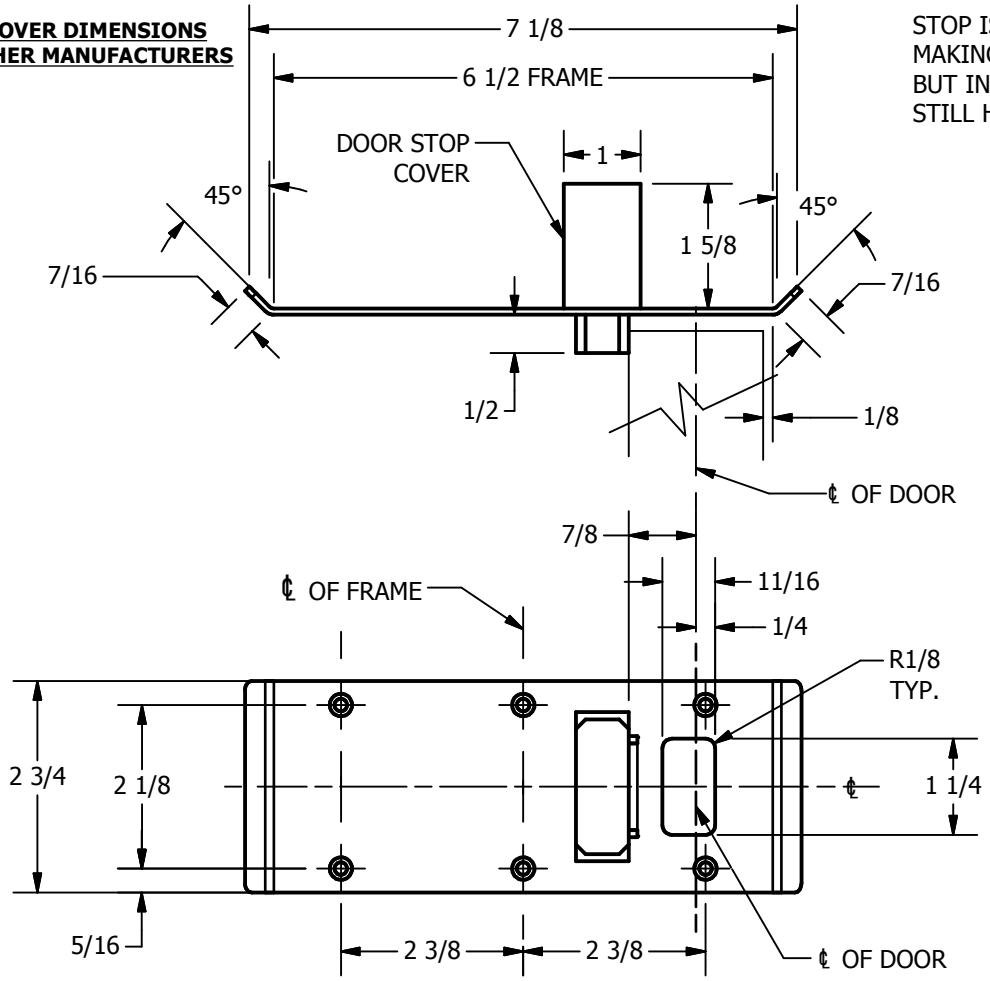

REINFORCEMENT:
WHEN INSTALLING IN METAL FRAME, REINFORCEMENT IS **NEEDED** WITH THIS PRODUCT, CUSTOMER OR MANUFACTURER TO SUPPY FRAME REINFORCEMENT WITH LATCH BOLT CLEARANCE

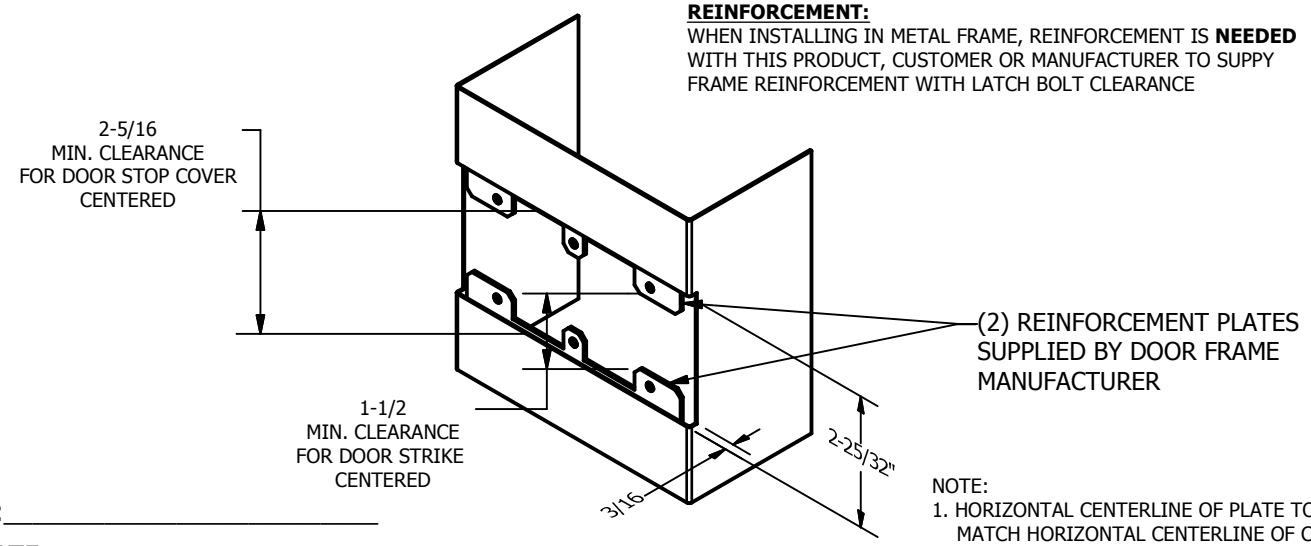

CUT-OUT FOR METAL JAMB

NOTE:
1. HORIZONTAL CENTERLINE OF PLATE TO MATCH HORIZONTAL CENTERLINE OF CUTOUT.
2. SCREWS 8-32 X 3/8" UNDERCUT F.H.M.S.
3. R.H. DOOR SHOWN, L.H. OPPOSITE

ORDER #:_____

ORDER DATE:_____

CUSTOMER:_____

CUSTOMER PO#:_____

MATERIAL:_____

QUANTITY:_____

Architectural Builders Hardware Mfg., Inc.
1222 Ardmore Ave., Itasca, IL 60143
630.875.9900; FAX 800.9FAXABH (932.9224)
www.abhmfg.com
Email: abhinfo@abhmfg.com