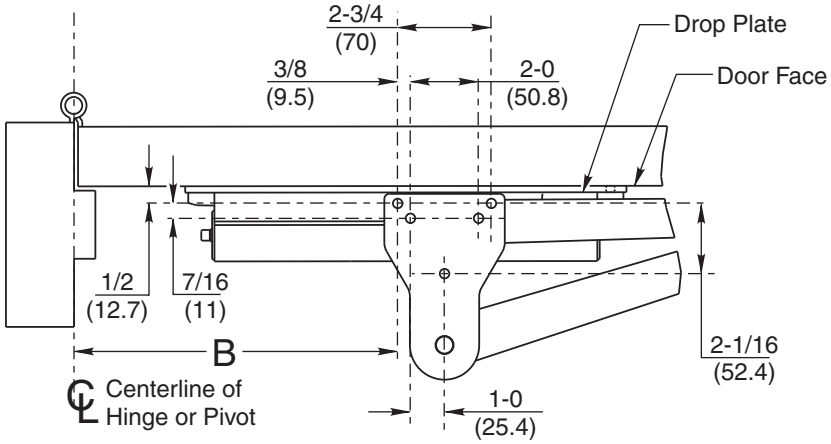


| Opening | Dimension "A" | Dimension "B" |
|---|---|---|
| | Inches (mm) | |
| To 120° | 3-3/4 (95.3) | 9-1/2 (241.3) |
| Over 120° ★ | 1-1/4 (31.8) | 7-0 (177.8) |

★ Door openings to 180° conditions permitting.

SARGENT®

ASSA ABLOY

| Fastener Type | Matl. | Drill Sizes |
|---|---|---|
| Self Drill Screw | Metal | No drill required |
| | Wood | 3/16" Predrill |
| 1/4 - 20 Mach Screw | Metal | #7 Drill; 1/4-20 Tap |
| Sleeve Nuts & Bolts | Metal | 9/32" Thru<br>3/8" Face opposite closer |
| | Wood | 3/8" Thru |

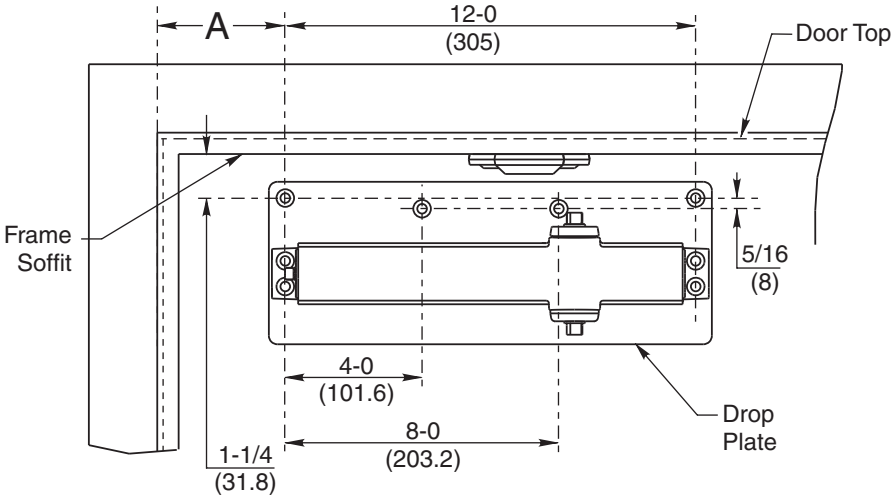


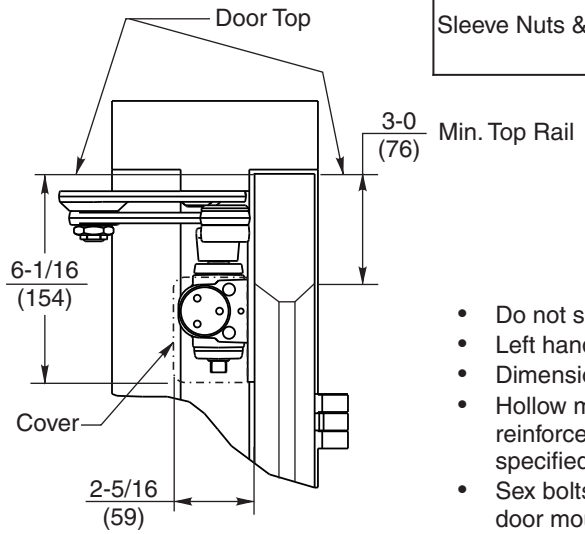


- Do not scale drawing.
- Left hand door shown, right hand opposite.
- Dimensions are in inches / (mm)
- Hollow metal door require channel or box type reinforcement when through bolt mount is specified.
- Sex bolts required for wood or plastic faced fire door mounting.
- Minimum thickness recommended for reinforcements in hollow metal doors and frames: .146" (2.66mm) unless otherwise specified.
- Arm with Hold Open function is NOT permitted on fire door.
- Maximum width hinge for this template is 5" (127).

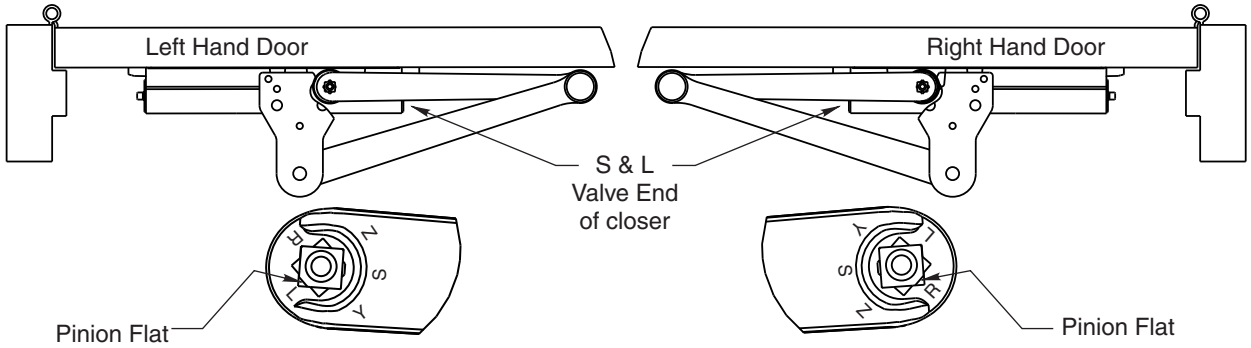


Copyright © 2013, Sargent Manufacturing Company, an ASSA ABLOY Group company. All rights reserved. Reproduction in whole or in part without the express written permission of Sargent Manufacturing Company is prohibited.

ASSA ABLOY, the global leader in door opening solutions

**SARGENT** ® Manufacturing Company

DATA SHEET:
1331 DOOR CLOSER WITH JP10 OR JPH10 ARM WITH 1331-D DROP PLATE. PARALLEL ARM APPLICATIONS.

RELEASE DATE: 8/20/2013

TEMPLATE NO. A8176A