EN900

Electric Strike Dimension

(discontinued)
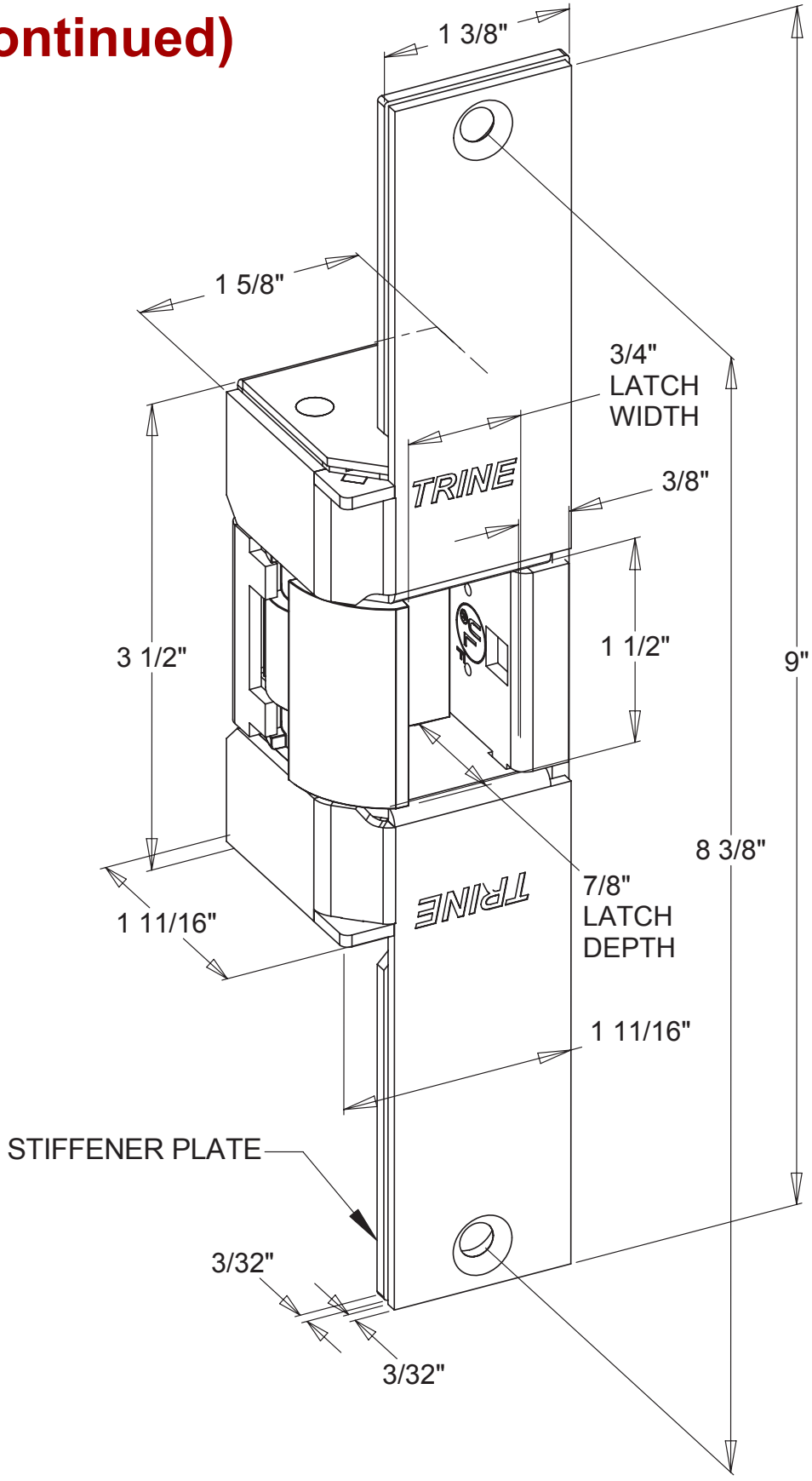
TRINE ACCESS TECHNOLOGY
1440 Ferris Place • Bronx • New York • 10461-3699
Telephone Number: (718) 829-2332
Fax Number: (718) 829-6405
Email: CustomerService@Trineonline.com
Website: www.Trineonline.com