METAL DOOR

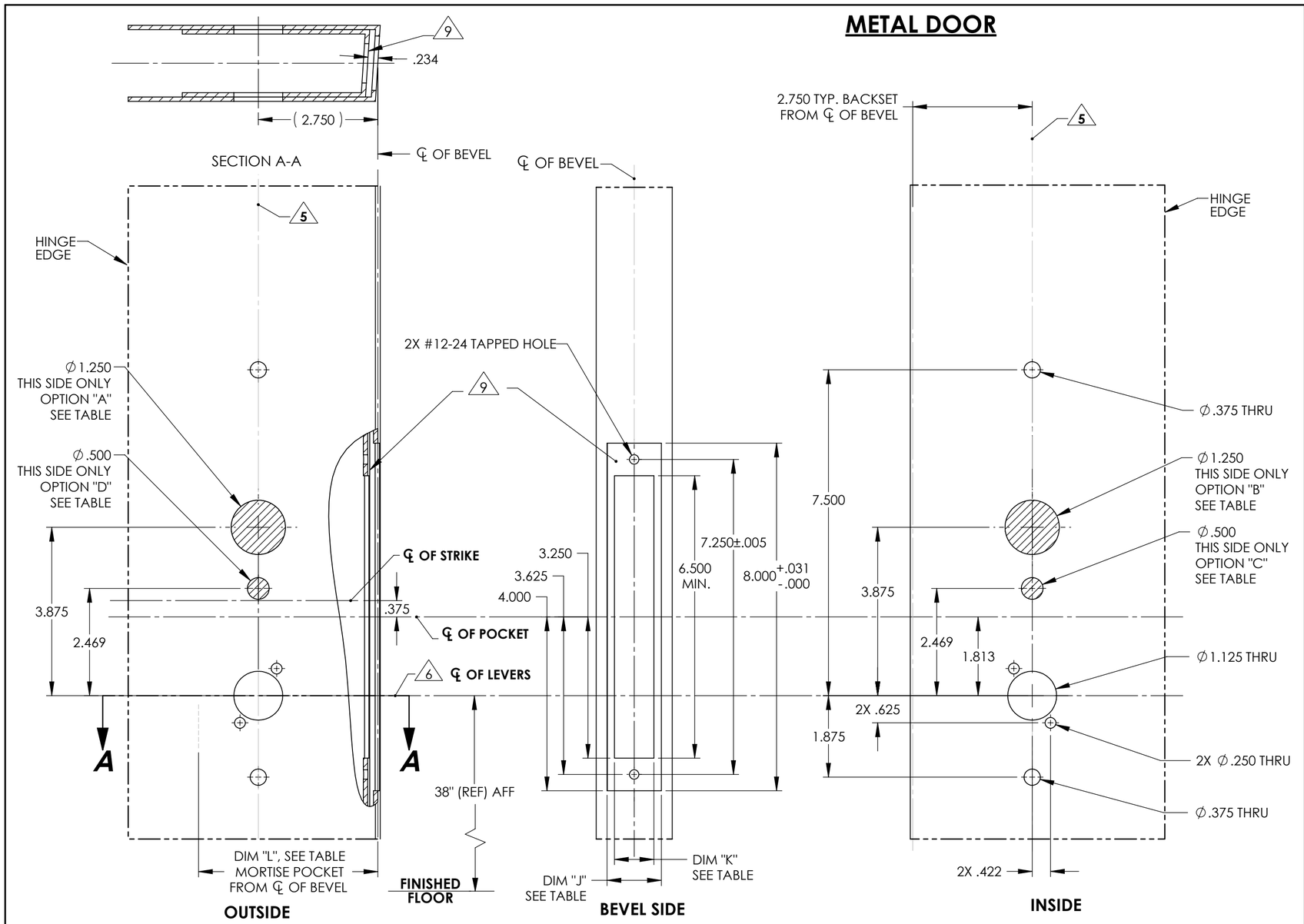

L.H. DOOR

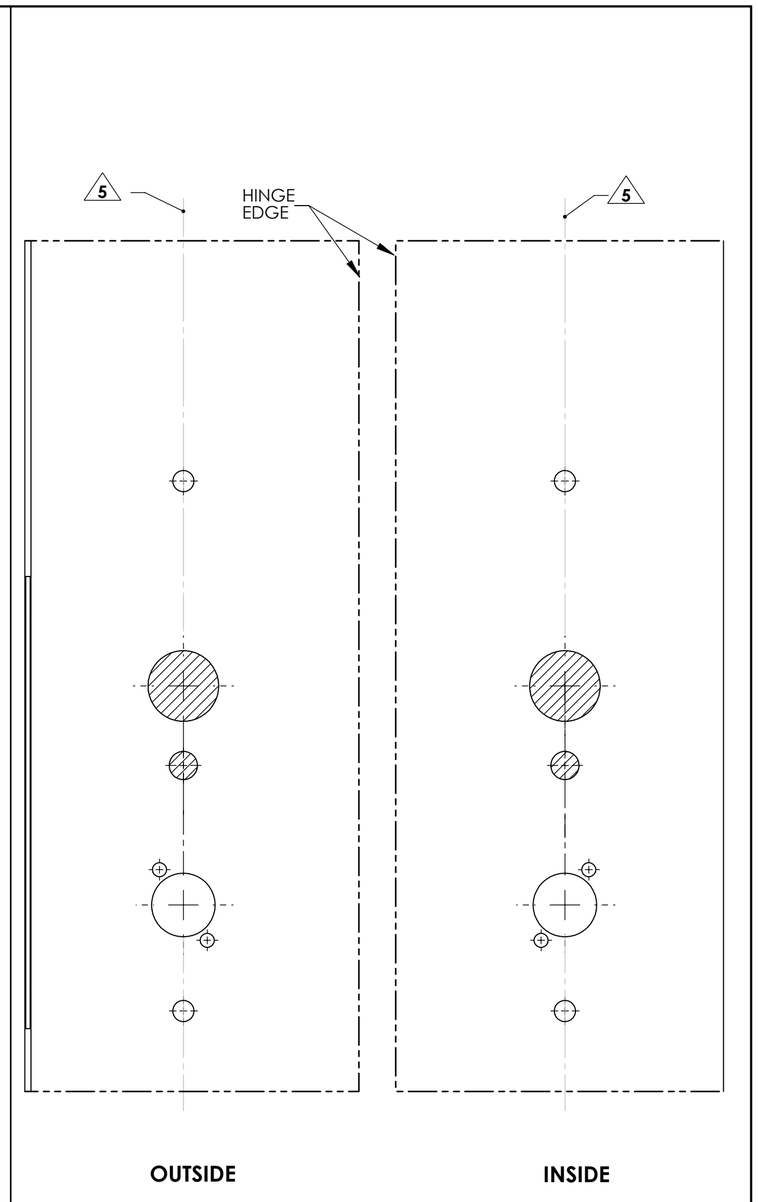

R.H. DOOR

NOTES:

1. DRAWING IS NOT TO SCALE.
2. PREPARATION DETAILS ARE IN SUPPLEMENT TO ANSI/BHMA A156.115 AND/OR A115W.
3. REFERENCE STRIKE TEMPLATE FOR DETAILS TO PREPARE FRAME.
4. FOR ELECTROLYNX APPLICATIONS, REFER TO MCKINNEY TRANSFER DEVICE CATALOG.
5. VERTICAL CENTERLINE IS REFERENCED FROM THE CENTERLINE OF THE BEVEL. (INDUSTRY STANDARD BEVEL IS 1/8 INCH IN 2 INCHES.)
6. CONSULT THE AUTHORITY HAVING JURISDICTION (AHJ) TO VERIFY THE RECOMMENDED MOUNTING HEIGHT ABOVE THE FINISHED FLOOR (AFF).
7. LIMITATIONS IN THE DOOR CONSTRUCTION PROCESS MAY REQUIRE SOME HOLES TO BE FIELD-LOCATED USING THE PHYSICAL PART AS A TEMPLATE.
8. STANDARD TOLERANCE OF ± .015 APPLIES TO ALL DOOR PREPARATION REQUIREMENTS, UNLESS OTHERWISE SPECIFIED.
9. DOOR REINFORCEMENT IS RECOMMENDED TO IMPROVE (SURFACE MOUNTED) FASTENER HOLDING POWER AND CRUSH RESISTANCE (WHEN THRU-BOLTING IS EMPLOYED). CONSTRUCTION TECHNIQUES SHOULD REFLECT INDUSTRY BEST PRACTICES (I.E. WDMA, SDI) AND AUTHORIZED METHODS WHERE LABEL SERVICE (I.E. UL, W-H) IS IN EFFECT.
10. WIRE RACEWAY AREAS SHOULD BE FREE OF OBSTRUCTIONS & SHARP EDGES TO PROTECT WIRES FROM CUTS & ABRASIONS.
11. CAREFULLY NOTE WHICH FEATURES ARE OPTIONAL, (WHETHER THE FEATURE APPLIES TO BOTH SIDES OF THE DOOR AND/OR IF A DEPTH APPLIES.)
12. MAXIMUM PRODUCT DIMENSIONS ARE SHOWN FOR THE PURPOSE OF VERIFYING FITMENT WITH DOOR FRAME STOPS, DOOR STILE SIZE & LIGHT/LOUVER KITS.
13. IF OPTIONAL LEVERS OR ROSES ARE USED REFERENCE THE RELATED PRODUCT DIMENSIONS TO VERIFY THE FITMENT REQUIREMENTS.

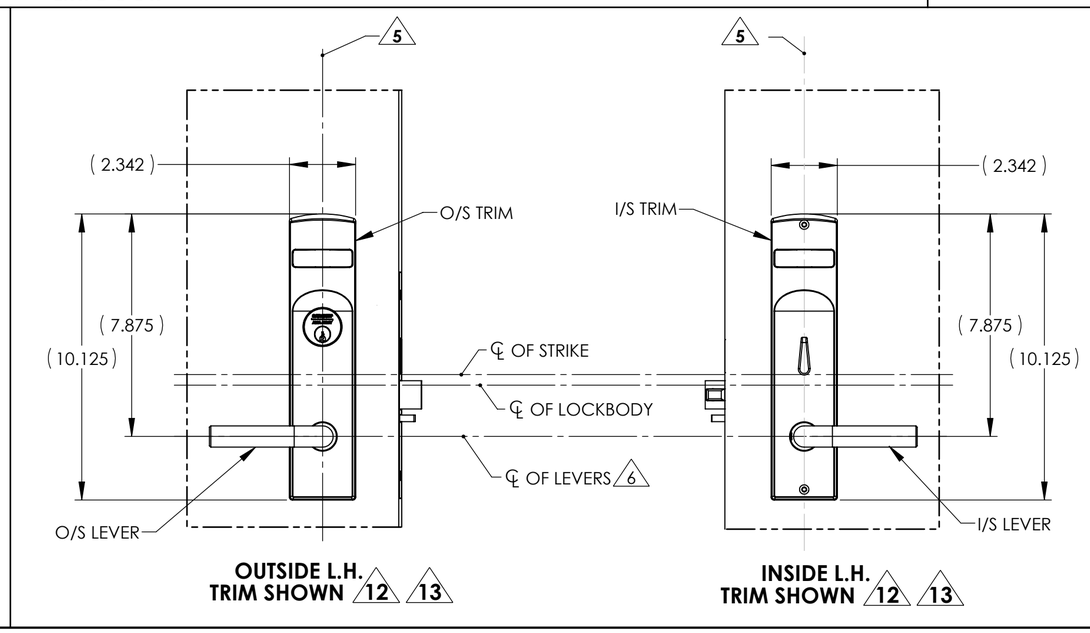

OUTSIDE L.H. TRIM SHOWN 12 13

INSIDE L.H. TRIM SHOWN 12 13

OPTIONS TABLE

LOCK FUNCTION	"A" O/S CYLINDER	"B" I/S CYLINDER	"C" I/S TURN	"D" O/S TURN
05, 24, 25, 28, 43, 45, 47, 50, 51, 56, 57, 58, 67, 281	X		X	
30, 37	X			
26, 29, 38, 39, 40, 41, 46, 52	X	X		
65, 66, 68			X	X
12, 285			X	
INDICATOR OPTION (ADD HOLES)				
V * 0 (INDICATOR OUTSIDE)				X
V0 * (INDICATOR INSIDE)			X	
V * * (INDICATOR BOTH SIDES)			X	X
* INDICATOR WINDOW OPTION CODE				

LOCK POCKET OPTIONS TABLE

PREFIXES & FUNCTIONS	DIM "J" LOCK FRONT	DIM "K" POCKET WIDTH	DIM "L" POCKET DEPTH
STANDARD	1.250±.015	.906	4.125
1- PREFIX	1.062±.015	.906	4.125
74- PREFIX	1.250±.015	1.125	4.250
RX- PREFIX OR 281/285 FUNCTIONS	1.250±.015	1.250	4.375

BACKSET DEFINITION

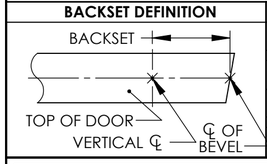

DOOR HANDING

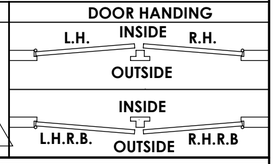

SARGENT ASSA ABLOY

Sargent Manufacturing Company
100 Sargent Drive New Haven, CT 06511

DOOR MANUFACTURERS TEMPLATE:
VN1 ESCUTCEHON INDICATOR TRIM
METAL DOOR
8200 MORTISE LOCK

SHEET 1 OF 2

RELEASE DATE: JULY 2019

TEMPLATE NO. 4746 4

WOOD DOOR

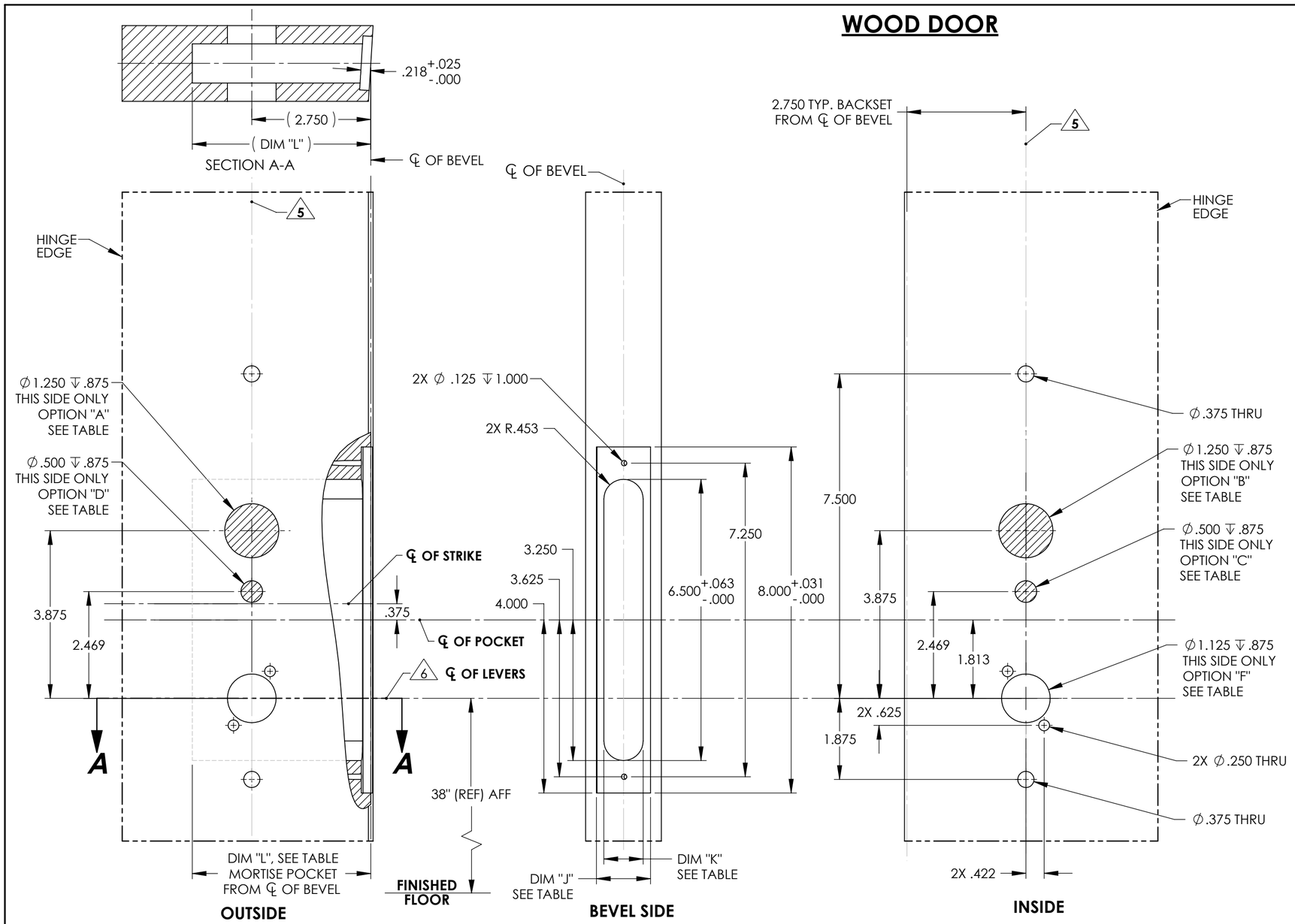

L.H. DOOR

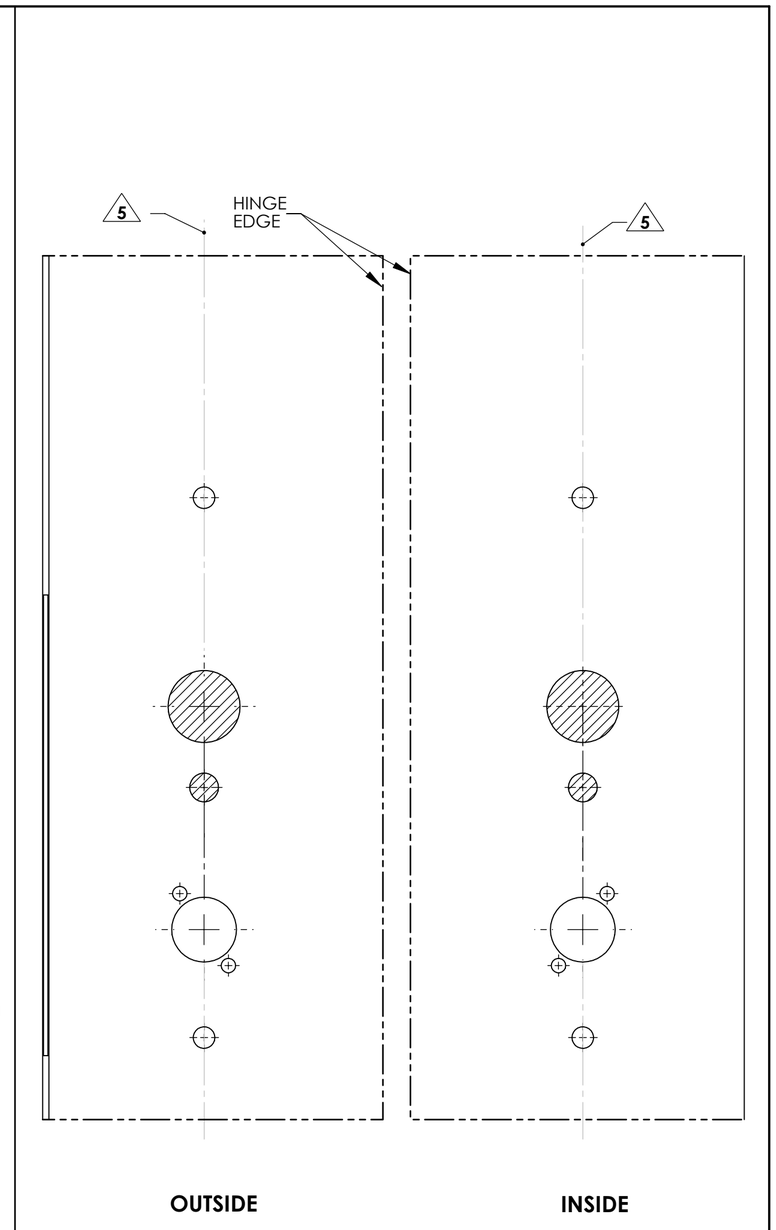

R.H. DOOR

NOTES:

1. DRAWING IS NOT TO SCALE.
2. PREPARATION DETAILS ARE IN SUPPLEMENT TO ANSI/BHMA A156.115 AND/OR A115W.
3. REFERENCE STRIKE TEMPLATE FOR DETAILS TO PREPARE FRAME.
4. FOR ELECTROLYNX APPLICATIONS, REFER TO MCKINNEY TRANSFER DEVICE CATALOG.
5. VERTICAL CENTERLINE IS REFERENCED FROM THE CENTERLINE OF THE BEVEL. (INDUSTRY STANDARD BEVEL IS 1/8 INCH IN 2 INCHES.)
6. CONSULT THE AUTHORITY HAVING JURISDICTION (AHJ) TO VERIFY THE RECOMMENDED MOUNTING HEIGHT ABOVE THE FINISHED FLOOR (AFF).
7. LIMITATIONS IN THE DOOR CONSTRUCTION PROCESS MAY REQUIRE SOME HOLES TO BE FIELD-LOCATED USING THE PHYSICAL PART AS A TEMPLATE.
8. STANDARD TOLERANCE OF ± .015 APPLIES TO ALL DOOR PREPARATION REQUIREMENTS, UNLESS OTHERWISE SPECIFIED.
9. DOOR REINFORCEMENT IS RECOMMENDED TO IMPROVE (SURFACE MOUNTED) FASTENER HOLDING POWER AND CRUSH RESISTANCE (WHEN THRU-BOLTING IS EMPLOYED). CONSTRUCTION TECHNIQUES SHOULD REFLECT INDUSTRY BEST PRACTICES (I.E. WDMA, SDI) AND AUTHORIZED METHODS WHERE LABEL SERVICE (I.E. UL, W-H) IS IN EFFECT.
10. WIRE RACEWAY AREAS SHOULD BE FREE OF OBSTRUCTIONS & SHARP EDGES TO PROTECT WIRES FROM CUTS & ABRASIONS.
11. CAREFULLY NOTE WHICH FEATURES ARE OPTIONAL, (WHETHER THE FEATURE APPLIES TO BOTH SIDES OF THE DOOR AND/OR IF A DEPTH APPLIES.)
12. MAXIMUM PRODUCT DIMENSIONS ARE SHOWN FOR THE PURPOSE OF VERIFYING FITMENT WITH DOOR FRAME STOPS, DOOR STILE SIZE & LIGHT/LOUVER KITS.
13. IF OPTIONAL LEVERS OR ROSES ARE USED REFERENCE THE RELATED PRODUCT DIMENSIONS TO VERIFY THE FITMENT REQUIREMENTS.

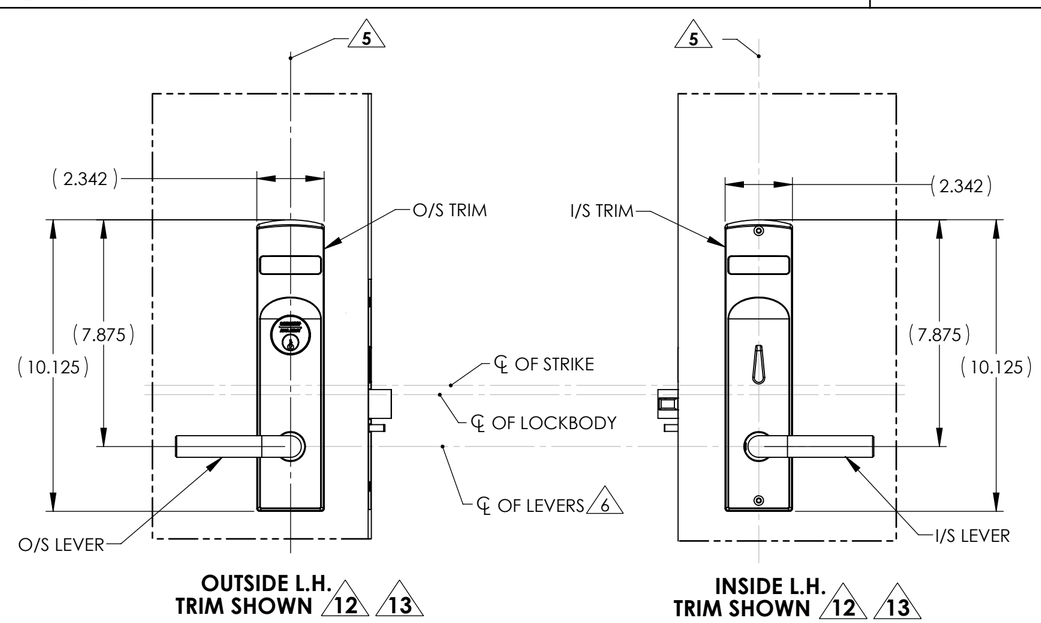

OPTIONS TABLE				
LOCK FUNCTION	"A" O/S CYLINDER	"B" I/S CYLINDER	"C" I/S TURN	"D" O/S TURN
05, 24, 25, 28, 43, 45, 47, 50, 51, 56, 57, 58, 67, 281	X		X	
30, 37	X			
26, 29, 38, 39, 40, 41, 46, 52	X	X		
65, 66, 68			X	X
12, 285			X	
INDICATOR OPTION (ADD HOLES)				
V * 0 (INDICATOR OUTSIDE)				X
V0 * (INDICATOR INSIDE)			X	
V * * (INDICATOR BOTH SIDES)			X	X

* INDICATOR WINDOW OPTION CODE

LOCK POCKET OPTIONS TABLE			
PREFIXES & FUNCTIONS	DIM "J" LOCK FRONT	DIM "K" POCKET WIDTH	DIM "L" POCKET DEPTH
STANDARD	1.250±.015	.906	4.125
1- PREFIX	1.062±.015	.906	4.125
74- PREFIX	1.250±.015	1.125	4.250
RX- PREFIX OR 281/285 FUNCTIONS	1.250±.015	1.250	4.375

BACKSET DEFINITION

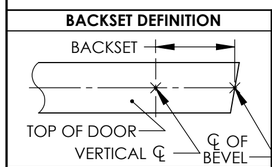

DOOR HANDING

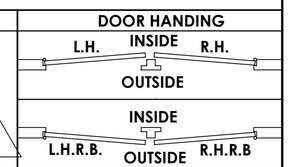

SARGENT ASSA ABLOY

Sargent Manufacturing Company
100 Sargent Drive New Haven, CT 06511

DOOR MANUFACTURERS TEMPLATE:
VN1 ESCUTCHEON INDICATOR TRIM
WOOD DOOR
8200 MORTISE LOCK

SHEET 2 OF 2

RELEASE DATE
JULY 2019

TEMPLATE NO.
4746 4