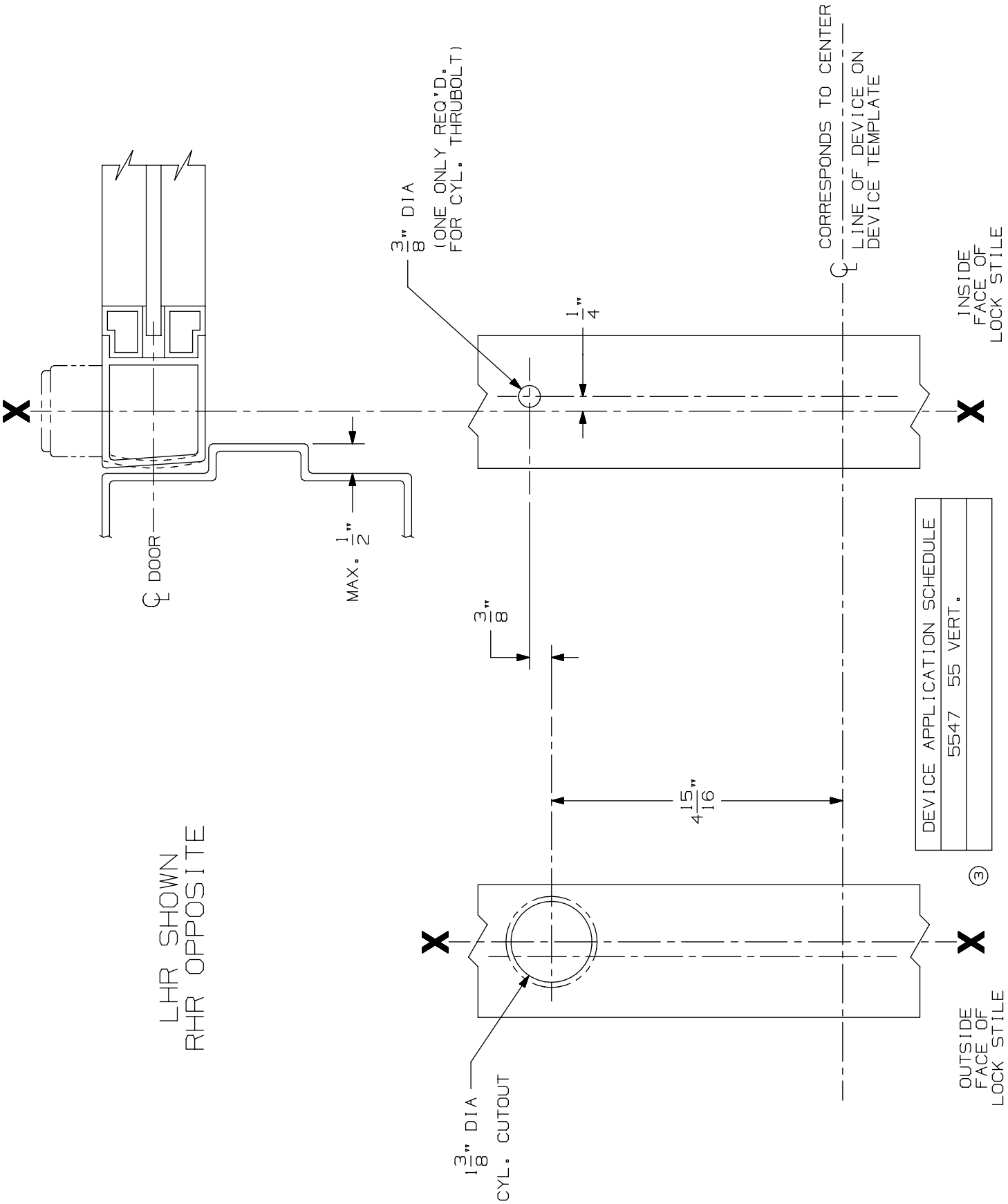

DEVICE APPLICATION SCHEDULE	
5547 55 VERT.	

③

555NL Cylinder Preparation	VON DUPRIN®	
NOTES: SEE MASTER SHEET #10001 FOR SUGGESTED REINFORCING	TEMPLATE NUMBER: 40017_a	DATE: 05-28-13