PULLS, PUSH PLATES, PULL PLATES, DOOR PROTECTION PLATES

pdqlocks.com

TABLE OF CONTENTS

PUSH PLATES....1-2
STRAIGHT PULLS, OFFSET PULLS....3-5
PUSH BARS, PULL-PUSH BAR SETS....6
PULL PLATES....7-9
PULL PLATE QUICK REFERENCE GUIDE....9
PULL MOUNTING OPTIONS SELECTION GUIDE....10
MOUNTING OPTION DETAILS....11-12
FASTENERS....13
DOOR PROTECTION PLATES....14
FINISHES....14

96 SERIES PUSH PLATES

Plates are available with optional cutout for cylinders or thumbturns

SPECIFICATIONS:

MOUNTING FASTENERS:	• #6 x 5/8 OH PH SMS
MATERIAL:	• Brass, Stainless Steel Grade 304
THICKNESS:	• 0.050”
STANDARD CUTOUT FOR CYLINDER:	• 1-1/4” DIA
STANDARD CUTOUT FOR THUMBTURN:	• 3/8” DIA
FINISHES:	• 605 (US3) bright Brass, 606 (US4) Satin Brass, 612 (US10) Satin Bronze, 613 (US10B) Oil Rubbed Bronze, 628 (US28) Aluminum - Anodized, 630 US32D) Satin Stainless Steel • Antimicrobial Coating available on 630 (US32D) only

OPTIONS FOR LOCKING HARDWARE

PREPS FOR THUMBTURNS

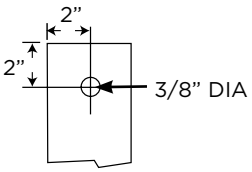

962/963 Series RH
Right Hand Shown

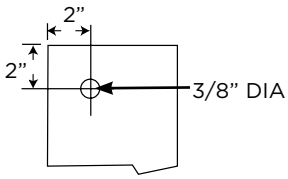

965 Series RH
Right Hand Shown

PREPS FOR CYLINDERS

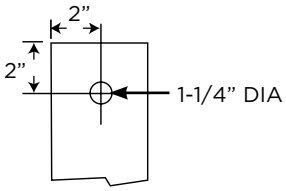

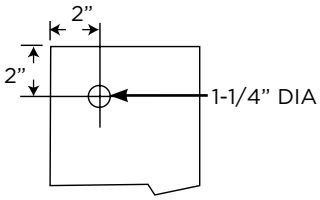

HANDING

IN SWING DOOR

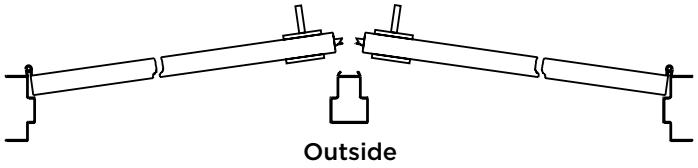

Left Hand (LH)

Right Hand (RH)

OUT SWING DOOR

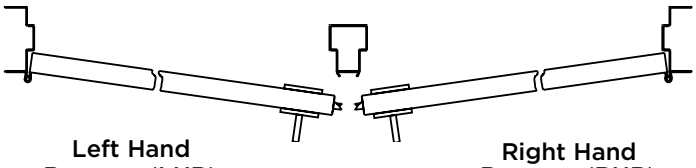

Left Hand Reverse (LHR)

Outside

Right Hand Reverse (RHR)

PULL POSITIONING

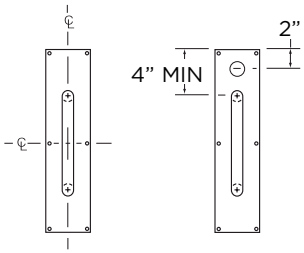

Plain

Cut

RECOMMENDED MOUNTING LOCATIONS

Note: Complies with ADA (Americans with Disabilities Act) Guidelines

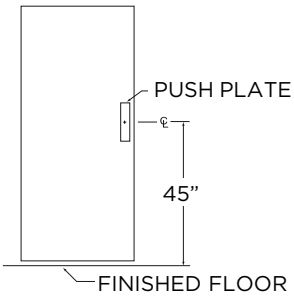

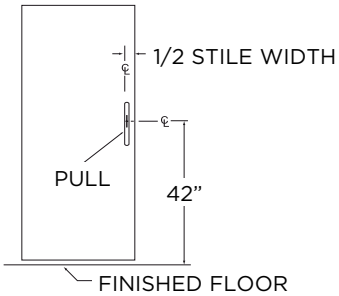

HOW TO ORDER

SERIES	SIZE		FINISH		HANDING[1]
96	2 — 3-1/2" X 15" 3 — 4" X 16" 5 — 6" X 16" (630 ONLY)		605 BRIGHT BRASS 606 SATIN BRASS 612 SATIN BRONZE 613 OIL RUBBED BRONZE 628 SATIN ALUMINUM, ANODIZED 630 SATIN STAINLESS STEEL 630AM SATIN STAINLESS STEEL WITH ANTIMICROBIAL		RH — Right Hand LH — Left Hand
96	**2**	**B**	**630**	**T**	**RH**
	B — 5-1/2" CTC C — 6" CTC D — 8" CTC E — 10" CTC F — 12" CTC		C — CYLINDER T — THUMBTURN		
	PREP FOR PULLS BY OTHERS OPTION[2]		**PREP FOR LOCKING HARDWARE OPTION[1,2]**		

Ordering Example: 96 2 630

- Denotes factory default

Notes: 1 - Handing required for Plate Size 5. **2 -** Cylinder and Thumbturn Prep not available in Pull Size F.

PULLS

1 SERIES DOOR PULL - 5/8" ROUND STRAIGHT

Mounting Options: - Type 1 (default), 12, 15.
- Mounting Options Shown on Page 11 and 12.

SPECIFICATIONS:

SIZE: • 5-1/2"

FINISHES: • 605 (US3) Bright Brass, 606 (US4) Satin Brass, 612 (US10) Satin Bronze, 613 (US10B) Oil Rubbed Bronze, 628 (US28) Aluminum, 630 (US32D) Satin Stainless Steel Grade 304
• Available with Antimicrobial Coating 630 (US32D) only

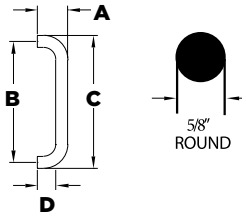

MODEL	PROJECTION (A)	CENTER TO CENTER (B)	OVERALL LENGTH (C)	CLEARANCE (D)
1B	2"	5-1/2"	6-3/4"	1-3/8"

2 SERIES DOOR PULL - 3/4" ROUND STRAIGHT

Mounting Options: - Standard - Type 1 (default), 6, 6R, 8, 12, 15.
- Back to Back - Type 5 (default), 13 (for 1/2" glass doors).
- Mounting Options Shown on Page 11 and 12.

SPECIFICATIONS:

SIZES: • 6" and 8"

FINISHES: • 605 (US3) Bright Brass, 606 (US4) Satin Brass, 612 (US10) Satin Bronze, 613 (US10B) Oil Rubbed Bronze, 628 (US28) Aluminum, 630 (US32D) Satin Stainless Steel Grade 304
• Available with Antimicrobial Coating 630 (US32D) only

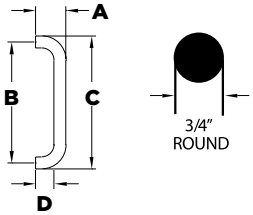

MODEL	PROJECTION (A)	CENTER TO CENTER (B)	OVERALL LENGTH (C)	CLEARANCE (D)
2C	2-1/4"	6"	6-3/4"	1-1/2"
22C	2-1/4"	6" (BTB)	6-3/4"	1-1/2"
2D	2-1/4"	8"	8-3/4"	1-1/2"
22D	2-1/4"	8" (BTB)	8-3/4"	1-1/2"

3 SERIES DOOR PULL - 1” ROUND STRAIGHT

Mounting Options: Standard - Type 1 HD (default), 6 HD, 6R HD, 8 HD, 12 HD, 15 HD .
- Back to Back - Type 5 HD (default), 13 (for 1/2” glass doors).
- Mounting Options Shown on Page 11 and 12.

SPECIFICATIONS:

SIZE: • 8”

FINISHES: • 605 (US3) Bright Brass, 606 (US4) Satin Brass, 612 (US10) Satin Bronze, 613 (US10B) Oil Rubbed Bronze, 628 (US28) Aluminum, 630 (US32D) Satin Stainless Steel Grade 304
• Available with Antimicrobial Coating 630 (US32D) only

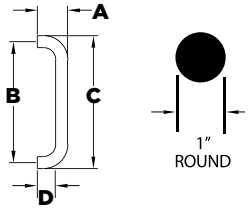

MODEL	PROJECTION (A)	CENTER TO CENTER (B)	OVERALL LENGTH (C)	CLEARANCE (D)
3D	3”	8”	9”	2”
33D	3”	8” (BTB)	9”	2”

H3 ADA SERIES DOOR PULL - 1” ROUND STRAIGHT LARGE 2-1/2” CLEARANCE FOR THE ACCESSIBILITY APPLICATIONS

Mounting Options: Standard - Type 1HD (default), 6HD, 6RHD, 8HD, 12HD, 15HD.
- Back to back - Type 5 HD (default), 13HD (BTB for Glass Doors).
- Mounting Options Shown on Page 11 and 12.

SPECIFICATIONS:

SIZES: • 8”, 10” (630 only), 12” (630 only)

FINISHES: • 606 (US4) Satin Brass, 613 (US10B) Oil Rubbed Bronze, 630 (US32D) Satin Stainless Steel Grade 304
• Available with Antimicrobial Coating 630 (US32D) only

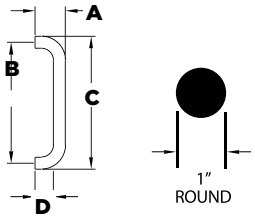

MODEL	PROJECTION (A)	CENTER TO CENTER (B)	OVERALL LENGTH (C)	CLEARANCE (D)
H3D	3-1/2”	8”	9”	2-1/2”
H33D	3-1/2”	8” (BTB)	9”	2-1/2”
H3E	3-1/2”	10”	11”	2-1/2”
H33E	3-1/2”	10” (BTB)	11”	2-1/2”
H3F	3-1/2”	12”	13”	2-1/2”
H33F	3-1/2”	12” (BTB)	13”	2-1/2”

5 SERIES DOOR PULL - 1” FLAT STRAIGHT

Mounting Options: - Type 1 (default), 12.
- Mounting Options Shown on Page 11 and 12.

SPECIFICATIONS:

SIZES: • 6” and 8”

FINISHES: • 605 (US3) Bright Brass, 606 (US4) Satin Brass, 612 (US10) Satin Bronze, 613 (US10B) Oil Rubbed Bronze, 628 (US28) Aluminum, 630 (US32D) Satin Stainless Steel Grade 304
• Available with Antimicrobial Coating 630 (US32D) only

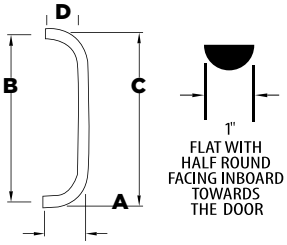

MODEL	PROJECTION (A)	CENTER TO CENTER (B)	OVERALL LENGTH (C)	CLEARANCE (D)
5C	2”	6”	6-1/2”	1-1/2”
5D	2”	8”	6-1/2”	1-1/2”

11 SERIES CAST DOOR PULL

Mounting Options: - Type 1 (default), 12.
- Mounting Options Shown on Page 11 and 12.

SPECIFICATIONS:

SIZES: • 5-1/2”

FINISHES: • 605 (US3) Bright Brass, 606 (US4) Satin Brass, 612 (US10) Satin Bronze, 613 (US10B) Oil Rubbed Bronze, 626 (US26D) Satin Chromium, 628 (US28) Aluminum, 630 (US32D) Satin Stainless Steel
• Available with Antimicrobial Coating 630 (US32D) only

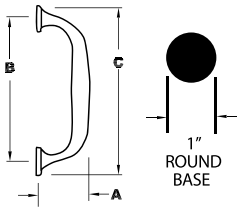

MODEL	PROJECTION (A)	CENTER TO CENTER (B)	OVERALL LENGTH (C)
11	1-13/16”	5-1/2”	6-1/2”

12 SERIES SURFACE MOUNT CAST DOOR PULL

Mounting Options: - Surface mount (default).
- Pull is machined/prepped for concealed mount installations. Specify mounting option 1 or 12.
- Mounting Options Shown on Page 11 and 12.

SPECIFICATIONS:

MOUNTING FASTENERS: • 6 ea #8 x 1” WS.

SIZES: • 5-1/2”

FINISHES: • 605 (US3) Bright Brass, 613 (US10B) Oil rubbed Bronze, 626 (US26D) Satin Chromium

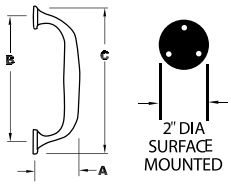

MODEL	PROJECTION (A)	CENTER TO CENTER (B)	OVERALL LENGTH (C)
12	2-1/4”	5-1/2”	7-1/2”

OFFSET PULL HANDLES

9E SERIES OFFSET PULL

Mounting Options:
- Surface mount (default).
- Pull is machined/prepped for concealed mount installations. Specify mounting option 1HD (Default), 5HD, 6HD, 6RHD, 8HD, 12HD, 13HD, 15HD
- Mounting Options Shown on Page 11 and 12.

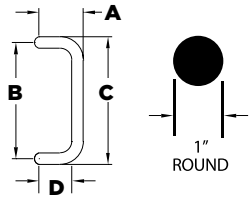

SPECIFICATIONS:

SIZE: • 10" CTC

FINISHES: • 630 (US32D) Satin Stainless Steel Grade 304
• Available with Antimicrobial Coating 630 (US32D) only

MODEL	PROJECTION (A)	CENTER TO CENTER (B)	OVERALL LENGTH (C)	CLEARANCE (D)
9E	3-1/4"	10"	11"	2-1/4"
99E	3-1/4"	10" (BTB)	11"	2-1/4"

FOR PUSH BARS, PULLS AND OFFSET PULL HANDLE - PUSH BAR SETS, SEE PAGE 7

Straight Pull - Push Bar

Straight Pull - Push Bar Set

Offset Pull Handle - Push Bar Set

HOW TO ORDER

PULL	
1B — 5/8" ROUND STRAIGHT PULL 5-1/2" CTC 2C — 3/4" ROUND STRAIGHT PULL 6" CTC 22C — 3/4" ROUND STRAIGHT BTB PULL, 6" CTC 2D — 3/4" ROUND STRAIGHT PULL 8" CTC 22D — 3/4" ROUND STRAIGHT BTB PULL, 8" CTC 3D — 1" ROUND STRAIGHT PULL 8" CTC H3D — 1" ROUND STRAIGHT PULL 8" CTC ADA H33D — 1" ROUND STRAIGHT BTB PULL 8" CTC ADA H3E — 1" ROUND STRAIGHT PULL 10" CTC ADA	H33E — 1" ROUND STRAIGHT BTB PULL 10" CTC ADA H3F — 1" ROUND STRAIGHT PULL 12" CTC ADA H33F — 1" ROUND STRAIGHT BTB PULL 12" CTC ADA 5C — 1" FLAT STRAIGHT PULL 6" CTC 5D — 1" FLAT STRAIGHT PULL 8" CTC 9E — 1" ROUND OFFSET PULL HANDLE 10" CTC 99E — 1" ROUND OFFSET PULL HANDLE BTB 10" CTC 11 — CAST PULL 5-1/2" CTC 12 — CAST PULL 5-12" CTC

9E SERIES OFFSET PULL	630	1
	606 SATIN BRASS 612 SATIN BRONZE 613 OIL RUBBED BRON 626 SATIN CHROME 628 SATIN ALUMINUM, ANODIZED 630AM SATIN STAINLESS STEEL WITH ANTIMICROBIAL	1 — TYPE 1 5 — TYPE 5 6 — TYPE 6 6R — TYPE 6R 8 — TYPE 8 12 — TYPE 12 13 — TYPE 13 15 — TYPE 15
	FINISH	MOUNTING OPTIONS[1,2]

Ordering Examples: Standard Mount for Metal Door: 2C 630 1

PUSH BARS

91 SERIES PUSH BAR

Mounting Options:
- Surface mount (default).
- Push bar is machined/prepped for concealed mount installations. Specify mounting option 1HD (Default), 6HD, 6RHD, 8HD, 15HD
- Mounting Options Shown on Page 11 and 12.

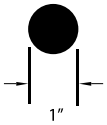

SPECIFICATIONS:

SIZE: • 33" CTC

FINISHES: • 630 (US32D) Satin Stainless Steel (Grade 304)
• Available with Antimicrobial Coating 630 (US32D) only

MODEL	PROJECTION (A)	CENTER TO CENTER (B)	OVERALL LENGTH (C)	CLEARANCE (D)
91	3-1/4"	33"	34"	2-1/4"

PULLS, OFFSET PULL HANDLE -PUSH BAR SETS

3, H3 Series Straight Pull

9E Series Offset Pull Handle

HOW TO ORDER

SERIES		PUSH BAR		MOUNTING OPTIONS , PUSH BAR ONLY[1]	
91		33 — 1" ROUND PUSH BAR, 33" CTC		1HD — TYPE 1 (DEFAULT) 6HD —TYPE 6 6RHD —TYPE 6R 8HD —TYPE 8 15HD —TYPE 15	
91	**9E**	**33**	**630**	**1**	**S**
00 — NO PULL 3D — 1" ROUND STRAIGHT PULL 8" CTC H3D — 1" ROUND STRAIGHT PULL 8" CTC ADA H3E — 1" ROUND STRAIGHT PULL 10" CTC ADA H3F — 1" ROUND STRAIGHT PULL 12" CTC ADA 9E — 1" ROUND OFFSET PULL HANDLE		630 SATIN STAINLESS STEEL 630AM SATIN STAINLESS STEEL WITH ANTIMICROBIAL		S — STANDARD (DEFAULT) D — DECORATIVE M — CONCEALED FOR METAL DOORS W — CONCEALED FOR COMPOSITE OR WOOD DOORS G — DECORATIVE FOR GLASS DOORS	
PULL		**FINISH**		**MOUNTING OPTIONS, OFFSET PULL AND PUSH BAR SET**	

Ordering Examples:
Push Bar Only, Thru Bolt Mounting: 91 00 33 630 1HD
Offset Pull Handle-Push-Bar Set, Standard Mounting: 91 9E 33 630 S

- Denotes factory default

Notes:

1 - For Mounting Options, see Page 13.

86 SERIES PULL PLATES

WITH 1B SERIES PULL

Mounting Options: - Type 1 (default), 12, 15.

SPECIFICATIONS:

PLATE SIZES: • 3-1/2" x 15", 4" x 16"
PULL SERIES: • 1B – 5/8" DIA, 5-1/2" Center to Center
THICKNESS: • 0.050"
PLATE MOUNTING FASTENERS: • #6 x 5/8 OH PH SMS
FINISHES: • 605 (US3) Bright Brass, 606 (US4) Satin Brass, 612 (US10) Satin Bronze, 613 (US10B) Oil Rubbed Bronze, 628 (US28) Aluminum, 630 (US32D) Satin Stainless Steel (Grade 304)
• Available with Antimicrobial Coating 630 (US32D) only

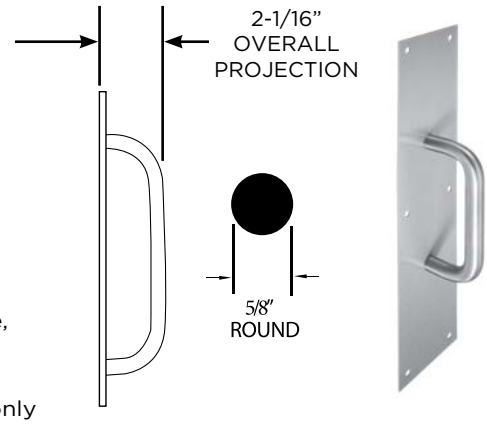

WITH 2 SERIES PULL

Mounting Options: - Standard - Type 1 (default), 6, 6R, 8, 12, 15.
- Mounting Options Shown on Page 11.

SPECIFICATIONS:

PLATE SIZES: • 3-1/2" x 15", 4" x 16"
PULL SERIES: • 2C – 3/4" DIA, 6" Center to Center, 2D – 8" Center to Center
THICKNESS: • 0.050"
PLATE MOUNTING FASTENERS: • #6 x 5/8 OH PH SMS
FINISHES: • 605 (US3) Bright Brass, 606 (US4) Satin Brass, 612 (US10) Satin Bronze, 613 (US10B) Oil Rubbed Bronze, 628 (US28) Aluminum, 630 (US32D) Satin Stainless Steel (Grade 304)
• Available with Antimicrobial Coating 630 (US32D) only

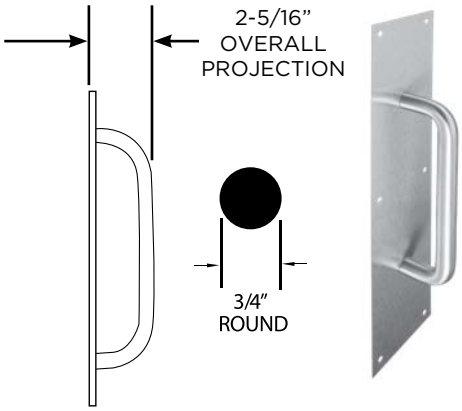

WITH 3 SERIES PULL

Mounting Options: - Standard - Type 1HD (default), 6HD, 6RHD, 8HD, 12HD, 15HD.
- Mounting Options Shown on Page 11.

SPECIFICATIONS:

PLATE: • 3-1/2" x 15", 4" x 16"
PULL SERIES: • 3D – 1" DIA, 8" Center to Center
THICKNESS: • 0.050"
PLATE MOUNTING FASTENERS: • #6 x 5/8 OH PH SMS
FINISHES: • 605 (US3) Bright Brass, 606 (US4) Satin Brass, 612 (US10) Satin Bronze, 613 (US10B) Oil Rubbed Bronze, 628 (US28) Aluminum, 630 (US32D) Satin Stainless Steel (Grade 304)
• Available with Antimicrobial Coating 630 (US32D) only

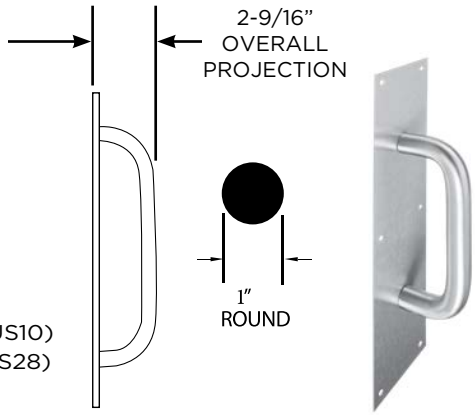

WITH H3 SERIES PULL

Mounting Options: - Standard - Type 1HD (default), 6HD, 6RHD, 8 HD, 12HD, 15HD.
- Mounting Options Shown on Page 11.

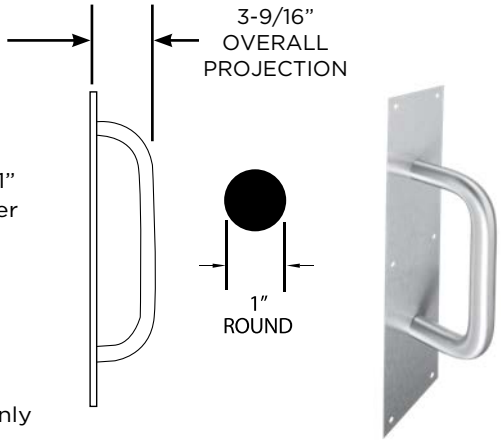

SPECIFICATIONS:

PLATE: • 3-1/2" x 15", 4" x 16"

PULL SERIES: • H3D – 1" DIA, 8" Center to Center (630 only), H3E – 1" DIA, 10" Center to Center (630 only), H3F - 12" Center to Center (630 only).
• 2-1/2" Clearance for accessibility Requirements

THICKNESS: • 0.050"

PLATE MOUNTING FASTENERS: • #6 x 5/8 OH PH SMS

FINISHES: • 630 (US32D) Satin Stainless Steel (Grade 304)
• Available with Antimicrobial Coating 630 (US32D) only

WITH 5 SERIES PULL

Mounting Options: - Pull: Type 1 (default), 12.
- Mounting Options Shown on Page 11.

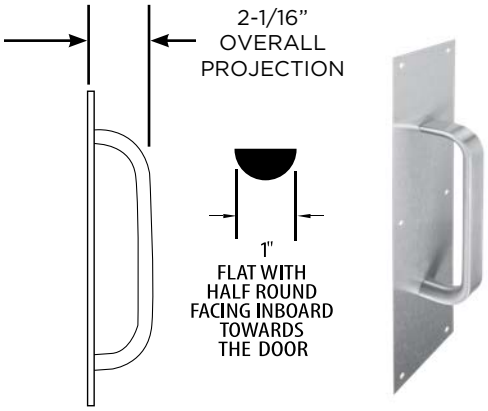

SPECIFICATIONS:

PLATE: • 3-1/2" x 15", 4" x 16", 6" x 16"

PULL SERIES: • 5C - 6" Center to Center, 5D - 8" Center to Center

THICKNESS: • 0.050"

PLATE MOUNTING FASTENERS: • #6 x 5/8 OH PH SMS

FINISHES: • 605 (US3) Bright Brass, 606 (US4) Satin Brass, 613 (US10B) Oil Rubbed Bronze, 626 (US26D) Satin Chromium, 630 (US32D) Satin Stainless Steel (Grade 304)
• Available with Antimicrobial Coating 626 (US26D) and 630 (US32D) only

WITH 11 SERIES PULL

Mounting Options: - Pull: Type 1 (default), 12.
- Mounting Options Shown on Page 11.

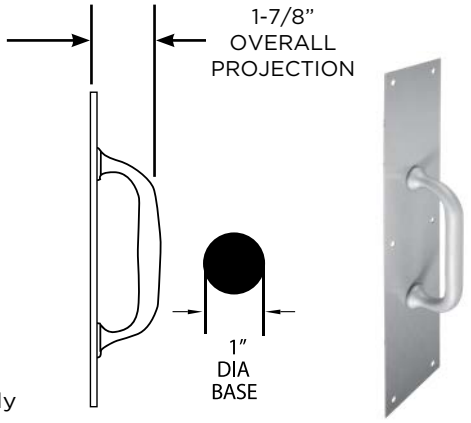

SPECIFICATIONS:

PLATE: • 3-1/2" x 15", 4" x 16", 6" x 16" (630 only)

PULL: • 11 – 5-1/4" Center to Center

THICKNESS: • 0.050"

PLATE MOUNTING FASTENERS: • #6 x 5/8 OH PH SMS

FINISHES: • 605 (US3) Bright Brass, 606 (US4) Satin Brass, 613 (US10B) Oil Rubbed Bronze, 630 (US32D) Satin Stainless Steel (Grade 304)
• Available with Antimicrobial Coating 630 (US32D) only

HOW TO ORDER

SERIES			FINISHES		HANDING[1]	MOUNTING OPTIONS[3]
86			605 — BRIGHT BRASS 606 — SATIN BRASS 612 — SATIN BRONZE 613 — OIL RUBBED BRONZE 626 — SATIN CHROME 628 — SATIN ALUMINUM, ANODIZED 630 — SATIN STAINLESS STEEL 630AM - SATIN STAINLESS STEEL WITH ANTIMICROBIAL		RH — RIGHT HAND LH — LEFT HAND	1 —TYPE 1 5 —TYPE 5 6 —TYPE 6 6R—TYPE 6R 8 —TYPE 8 12 —TYPE 12 13 —TYPE 13 15 —TYPE 15
86	**3**	**2D**	**630**	**T**	**RH**	**1**
2 — 3-1/2" X 15" 3 — 4" X 16" 5 — 6" X 16" (630 ONLY)		1B — 5/8" ROUND STRAIGHT PULL 5-1/2" CTC 2C — 3/4" ROUND STRAIGHT PULL 6" CTC 2D — 3/4" ROUND STRAIGHT PULL 8" CTC 3D — 1" ROUND STRAIGHT PULL 8" CTC H3D — 1" ROUND STRAIGHT PULL 8" CTC ADA H3E — 1" ROUND STRAIGHT PULL 10" CTC ADA H3F — 1" ROUND STRAIGHT PULL 12" CTC ADA 5C — 1" ROUND STRAIGHT PULL 6" CTC 5D — 1" ROUND STRAIGHT PULL 8" CTC 11 — CAST PULL 5-1/2" CTC	C — CYLINDER T — THUMBTURN			
PLATE		**PULL**	**PREP FOR LOCKING HARDWARE[1,2]**			

Ordering Examples: Standard Mount for Metal Door: 86 3 2D 630 1

- Denotes factory default.

Notes: **1 -** Handing required for Plate Size 5 **2** - Cylinder and Thumbturn Prep not available in Plate Size 5
3 - Defaults shown with each Pull Plate series.

PULL MOUNTING QUICK REFERENCE GUIDE

PULL TYPE	DESCRIPTION	MOUNTING OPTIONS							
		HD*	1	5	6/6R	8	12	13	15
1B	5/8" Round Straight Pull 5-1/2" CTC		•				•		•
2C	3/4" Round Straight Pull 6" CTC		•		•	•	•		•
22C	3/4" Round Straight BTB Pull 6" CTC			•				•	
2D	3/4" Round Straight Pull 8" CTC		•		•	•	•		•
22D	3/4" Round Straight BTB Pull 8" CTC			•				•	
3D	1" Round Straight Pull 8" CTC	•	•		•	•	•		•
33D	1" Round Straight BTB Pull 8" CTC	•							
H3D	1" Round Straight Pull 8" CTC ADA	•	•		•	•	•		•
H33D	1" Round Straight BTB Pull 8" CTC ADA	•		•				•	
H3E	1" Round Straight Pull 10" CTC ADA	•	•		•	•	•		•
H33E	1" Round Straight BTB Pull 10" CTC ADA	•		•				•	
H3F	1" Round Straight Pull 12" CTC ADA	•	•		•	•	•		•
H33F	1" Round Straight BTB Pull 12" CTC ADA	•		•				•	
5C	1" 1/2 Round Straight Pull 6" CTC	•	•				•		
5D	1" 1/2 Round Straight Pull 8" CTC	•	•				•		
9E	1" Round Offset Pull Handle 10" CTC	•							
99E	1" Round Offset Pull Handle BTB 10" CTC	•							
11	Cast Pull 5-1/2" CTC		•				•		
12	Cast Pull, Surface Mount, 5-1/2" CTC		•				•		

*HD Designation indicates 5/16" fasteners for 1 inch diameter pulls

PULL MOUNTING OPTIONS SELECTION GUIDE

PULL TYPE	DESCRIPTION	1	1HD	5	5HD	6	6HD	6R	6RHD	8	8HD	12	12HD	13	13HD	15	15HD
1B	5/8" Round Straight Pull 5-1/2" CTC	•										•				•	
2C	3/4" Round Straight Pull 6" CTC	•				•		•		•		•				•	
22C	3/4" Round Straight BTB Pull 6" CTC			•										•			
2D	3/4" Round Straight Pull 8" CTC	•				•		•		•		•				•	
22D	3/4" Round Straight BTB Pull 8" CTC			•										•			
3D	1" Round Straight Pull 8" CTC	•	•				•		•		•		•				•
33D	1" Round Straight BTB Pull 8" CTC				•										•		
H3D	1" Round Straight Pull 8" CTC ADA	•	•				•		•		•		•				•
H33D	1" Round Straight BTB Pull 8" CTC ADA				•										•		
H3E	1" Round Straight Pull 10" CTC ADA		•				•		•		•		•				•
H33E	1" Round Straight BTB Pull 10" CTC ADA				•										•		
H3F	1" Round Straight Pull 12" CTC ADA		•				•		•		•		•				•
H33F	1" Round Straight BTB Pull 12" CTC ADA				•										•		
5C	1" 1/2 Round Straight Pull 6" CTC	•										•					
5D	1" 1/2 Round Straight Pull 8" CTC	•										•					
9E	1" Round Offset Pull Handle 10" CTC		•				•		•		•		•				•
99E	1" Round Offset Pull Handle BTB 10" CTC				•										•		
11	Cast Pull 5-1/2" CTC	•										•					
12	Cast Pull, Surface Mount, 5-1/2" CTC	•										•					

Note: "X" denotes availability.

MOUNTING OPTIONS FOR OFFSET PULL HANDLES- PUSH BAR SETS		MOUNTING TYPES	
TYPE	DESCRIPTION	COMMON END	FREE END
S	Std Thru Bolt For 1-3/4" Metal, Composite or Wood Doors (Default)	5HD	1HD
D	Decorative Thru Bolt for 1-3/4" Metal, Composite or Wood Doors	5HD	12HD
M	Concealed for 1-3/4" Metal Doors	5HD	6HD
W	Concealed for 1-3/4" Composite or Wood Doors	5HD	15HD
G	Decorative Thru Bolt for 1/2" Glass Doors	13HD	8HD

MOUNTING OPTIONS - STRAIGHT PULLS

THRU BOLT

TYPE 1

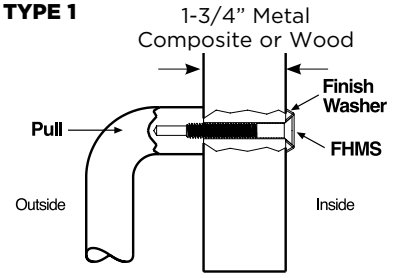

TYPE	BOLT SIZE	DRILL SIZE
1 (DEFAULT)	1/4 - 20	9/32"
1HD	5/16 - 18	11/32"

TYPE 12

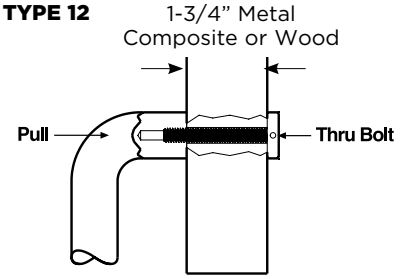

TYPE	BOLT SIZE	DRILL SIZE
12	1/4 - 20	9/32"
12HD	5/16 - 18	11/32"

TYPE 15

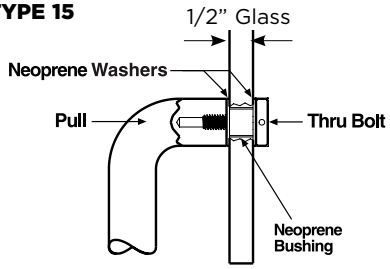

TYPE	BOLT SIZE	DRILL SIZE GLASS
15	1/4 - 20	5/8"
15HD	5/16 - 18	5/8"

SURFACE CONCEALED

METAL DOOR - TYPE 6

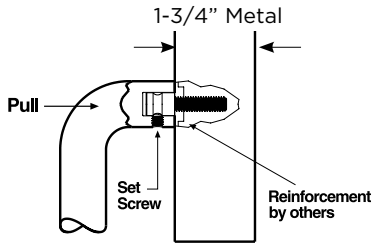

Minimum diameter of pull is **3/4"**

TYPE	BOLT SIZE	THREAD SIZE
6	1/4 - 20	1/4 - 20 TAP
6HD	5/16 - 18	5/16 - 18 TAP

METAL DOOR - TYPE 6R

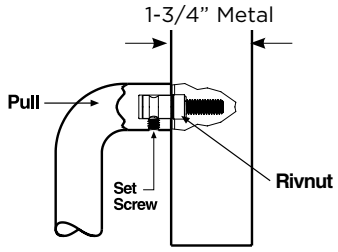

Minimum diameter of pull is **3/4"**

TYPE	BOLT SIZE	DRILL SIZE METAL
6R	1/4 - 20	3/8" X 1-1/4" DP
6RHD	5/16 - 18	1/2" X 1-1/4" DP

WOOD DOOR - TYPE 8

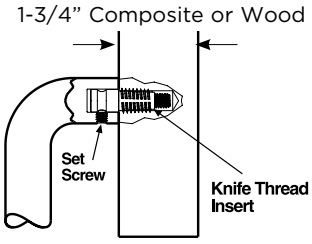

Minimum diameter of pull is **3/4"**

TYPE	BOLT SIZE	DRILL SIZE WOOD
8	1/4 - 20	1-1/4" DP
8HD	5/16 - 18	1-1/4" DP

BACK TO BACK

WOOD OR METAL DOOR - TYPE 5

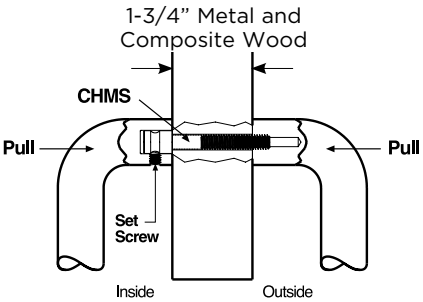

Minimum diameter of pull is **3/4"**

TYPE	BOLT SIZE	DRILL SIZE
5 (DEFAULT)	1/4 - 20	9/32"
5HD	5/16 - 18	11/32"

GLASS TYPE 13

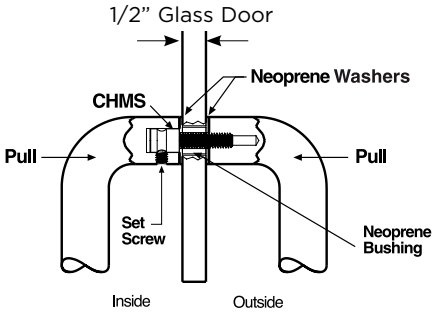

Minimum diameter of pull is **3/4"**

TYPE	BOLT SIZE	DRILL SIZE GLASS
13 (DEFAULT)	1/4 - 20	5/8"
13HD	5/16 - 18	5/8"

MOUNTING OPTIONS - PULL, OFFSET PULL HANDLES-PUSH BAR SETS

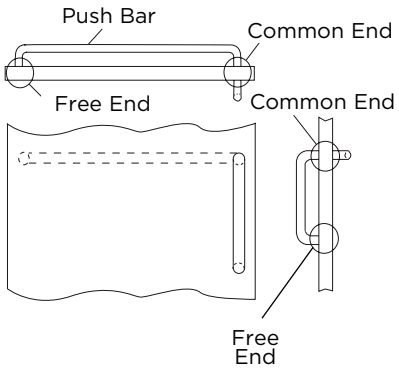

FREE END DETAILS

Thru Bolt

TYPE 1

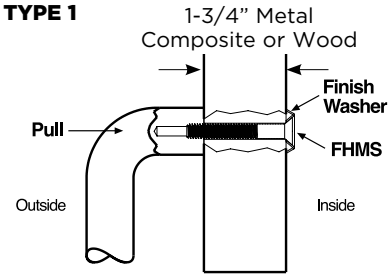

TYPE	BOLT SIZE	DRILL SIZE
1HD	5/16 - 18	11/32"

TYPE 12

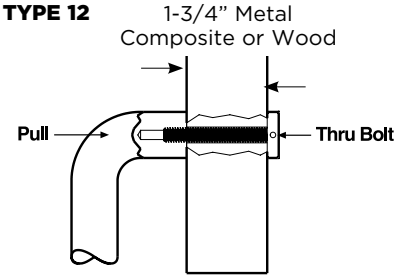

TYPE	BOLT SIZE	DRILL SIZE
12HD	5/16 - 18	11/32"

SURFACE CONCEALED

TYPE 15

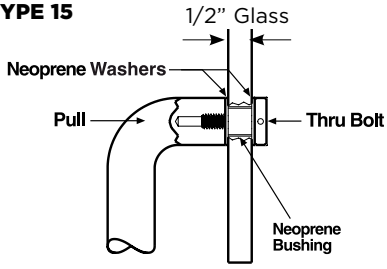

TYPE	BOLT SIZE	DRILL SIZE GLASS
15HD	5/16 - 18	5/8"

TYPE 6

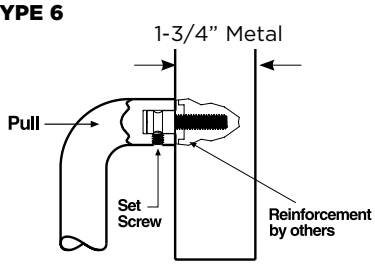

Minimum diameter of pull is **3/4"**

TYPE	BOLT SIZE	THREAD SIZE
6HD	5/16 - 18	5/16 - 18 TAP

TYPE 6R

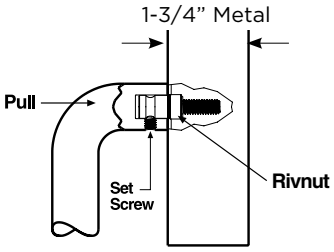

Minimum diameter of pull is **3/4"**

TYPE	BOLT SIZE	DRILL SIZE METAL
6RHD	5/16 - 18	1/2" X 1-1/4" DP

COMMON END DETAILS

TYPE 8

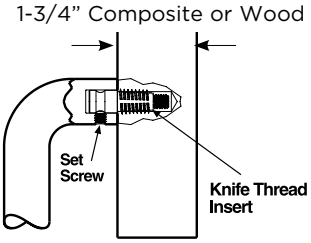

Minimum diameter of pull is **3/4"**

TYPE 5

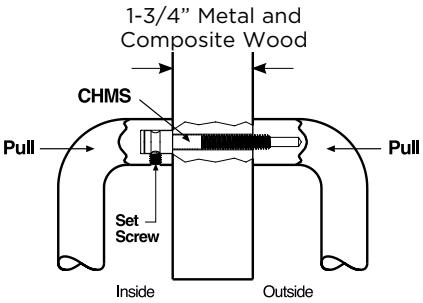

Minimum diameter of pull is **3/4"**

TYPE 13

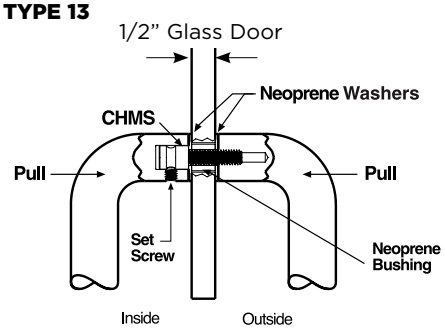

Minimum diameter of pull is **3/4"**

FASTENERS

SCREW TYPES

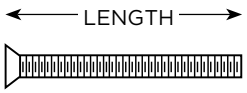

STANDARD THRU-BOLT FLAT HEAD MACHINE SCREW (FHMS)

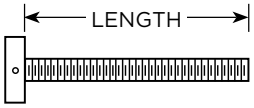

DECORATIVE THRU BOLT

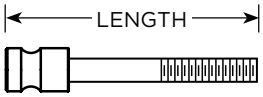

NARROW FHMS WITH STEEL SLEEVE FOR CONCEALED AND BACK TO BACK

FASTENER PACKS FOR DOOR PULLS

Note: Fastener packs for 1-3/4" Steel and Composite Wood or 1/2" Thick Glass Doors. For other door thickness applications, contact PDQ Technical Service.

PART NUMBER (SPECIFY FINISH 605, 613 or 626)	MOUNTING TYPE OPTIONS	DESCRIPTION
9001	1	2 ea. 1/4-20 x 2-1/4" FH MS, 2 ea. 1/4" Finish Washers.
9001HD	1HD	2 ea. 5/16-18 x 2-1/4 FH MS, 2 ea. 5/16" Finish Washers.
9005	5	2 ea. 1/4-20 x 2-3/4" Undersize Head FH MS, 2 ea. 1/4-20 x 3/16" Set Screws, 2 ea. 1/4" x 1/2" Tapered Steel Sleeves, 2 ea. 1/4-20 x 1/2" Threaded Insert.
9005HD	5HD	2 ea. 5/16-18 x 2-3/4" Undersize Head FH MS, 2 ea. 1/4-20 x 1/4" Set Screws, 2 ea. 5/16" x 1/2" Tapered Steel Sleeves, 2 ea. 1/4-20 x 1/2" Threaded Insert.
9006	6	2 ea. 1/4-20 x 1" Undersize Head FH MS, 2 ea. 2 ea. 1/4-20 x 3/16" Set Screws, 2 ea. 1/4" x 1/2" Tapered Steel Sleeves.
9006HD	6HD	2 ea. 5/16-18 x 1" Undersize Head FH MS, 2 ea. 1/4-20 x 1/4" Set Screws, 2 ea. 5/16" x 1/2" Tapered Steel Sleeves.
9006R	6R	2 ea. 1/4-20 x 1-3/4" Undersize Head FH MS, 2 ea. 1/4-20 x 3/16" Set Screws, 2 ea. 1/4" x 1/2" Tapered Steel Sleeves, 2 ea. 1/4-20 Rivnut Inserts.
9006RHD	6RHD	2 ea. 5/16-18 x 1-5/8 Undersize Head FH MS, 2 ea. 1/4-20 x 1/4" Set Screws, 2 ea. 5/16" x 1/2" Tapered Steel Sleeves, 2 ea. 5/16-18 Rivnut Inserts
9008	8	2 ea. 1/4-20 x 1-5/8" Undersize Head FH MS, 2 ea. 1/4-20 x 3/16" Set Screws, 2 ea. 1/4" x 1/2" Tapered Steel Sleeves, 2 ea. 1/4 - 20 Knife Thread Inserts
9008HD	8HD	2 ea. 5/16-18 x 1-5/8 Undersize Head FH MS, 2 ea. 1/4-20 x 3/16" Set Screws, 2 ea. 5/16" x 1/2" Tapered Steel Sleeves, 2 ea. 5/16 - 18 Knife Thread Inserts.
9012	12	2 ea. 1" DIA Head, 1/4-20 x 2-1/4" Decorative Cap Bolts.
9012HD	12HD	2 ea. 1" DIA Head, 5/16-18 x 2-1/4" Decorative Cap Bolts.
9013	13	2 ea. 1/4-20 x 1-3/4" Undersize Head FH MS, 2 ea. 1/4-20 x 3/16" Set Screws, 2 ea. 1/4" x 1/2" Tapered Steel Sleeves, 2 ea. Bushings for 1/2" Thick Glass Door, 4 ea. Neoprene Washer.
9013HD	13HD	2 ea. 5/16-18 x 1-3/4" Undersize Head FH MS, 4 ea. 1/4-20 x 1/4" Set Screws, 2 ea. 5/16" x 1/2" Tapered Steel Sleeves, 2 ea. Bushings for 1/2" Thick Glass Door, 4 ea. Neoprene Washers.
9015	15	2 ea. 1" DIA Head 1/4-20 x 1-1/8" Decorative Cap Bolts, 2 ea. Neoprene Bushings for 1/2" Thick Glass Door, 4 ea. Neoprene Washers.
9015HD	15HD	2 ea. 1" DIA Head 1/4-20 x 1-1/8 decorative Cap Bolts, 2 ea. Neoprene Bushings for 1/2" Thick Glass Door, 4 ea. Neoprene Washers.

Ordering example: 9001 630

MOUNTING OPTIONS FOR OFFSET PULL HANDLES- PUSH BAR SETS		MOUNTING TYPES	
TYPE	DESCRIPTION	COMMON END	FREE END
S	Std Thru Bolt For 1-3/4" Metal, Composite or Wood Doors (Default)	5HD	1HD
D	Decorative Thru Bolt for 1-3/4" Metal, Composite or Wood Doors	5HD	12HD
M	Concealed for 1-3/4" Metal Doors	5HD	6HD
W	Concealed for 1-3/4" Composite or Wood Doors	5HD	15HD
G	Decorative Thru Bolt for 1/2" Glass Doors	13HD	8HD

98 SERIES DOOR PROTECTION PLATES

MADE IN USA

- Proudly Made in the USA
- Exclusive laser cutting process provides a rounded edge as standard.
- Optional Pencil/Polish process provides a heavy beveled type edge.
- Provides protection for the bottom of the door from scuffing due to foot traffic or cleaning maintenance
- Recommended for all doors especially when using a door closer.

SPECIFICATIONS:

MATERIAL: • Stainless Steel Grade 304, Brass, Aluminum
THICKNESS: • 0.050”
MOUNTING FASTENERS: • #6 x 5/8 OH PH SMS
FINISHES: • 605 (US3) Bright Brass and 613 (US10B), 628 (US28) Aluminum
• 630 (US32D) Satin Stainless Steel
OPTIONS: • BV - Edge Treatment, Beveled on 3 sides
• CS - Countersunk Holes

HOW TO ORDER

SERIES		WIDTH		OPTIONS EDGE TREATMENT	
98		28 — 28” 34 — 34” 35 — 35” 40 — 40” 41 — 41” 46 — 46”		BV — HEAVY BEVELED EDGE, 3 SIDES	
98	**06**	**34**	**630**	**—**	**—**
06 — 6” 08 — 8” 10 — 10”		605 BRIGHT BRASS 613 OIL RUBBED BRONZE 628 SATIN ALUMINUM, ANODIZED 630 SATIN STAINLESS STEEL 630AM SATIN STAINLESS STEEL WITH ANTIMICROBIAL		CS — COUNTERSUNK HOLES	
HEIGHT		**FINISH**		**MOUNTING HOLES**	

Ordering Example: 98 06 34 630

Notes: 1 - Antimicrobial protected coating available with 630 only.

SELECTION GUIDE

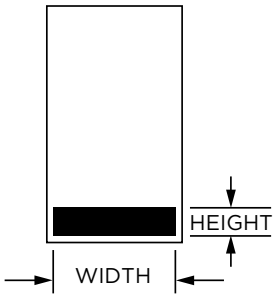

TYPES

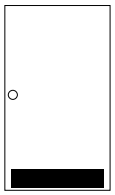

MOP PLATE
UP TO 6” H
X 48” W

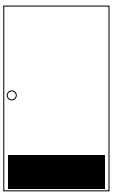

KICK PLATE
6” TO 12” H
X 48” W

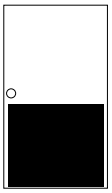

ARMOR PLATE
UP TO 48” H X 48” W
AND AVAILABLE IN
MOST FINISHES

General Guidelines for Determining Plate Width:

For Push Side of Door: Use 2” less than the total width of the door.

For Pull Side of the Door: Use 1-1/2” less than the total width of the door.

FINISHES

ARCHITECTURAL

605 (US3)
Bright Brass

606 (US4)
Satin Brass

612 (US10)
Satin Bronze

613 (US10B)
Oil Rubbed Bronze

626 (US26D)
Satin Chromium

628 (US28)
Aluminum

629 (US32)
Bright Stainless Steel

630 (US32D)
Satin Stainless Steel

SPECIAL FINISH COATING

Available with antimicrobial technology that is known to inhibit the growth of microbes. Offered on 630 Satin Stainless Steel only.

Finishes shown are representative only. Not all products are available in all finishes listed.

SECURING
CONFIDENCE
OPENING
POSSIBILITIES

Phone: 800.441.9692
Tech Support: 833.2.PDQTEC (833.273.7832)
FAX: 717.656.6892 | Email: help@pdqlocks.com

Headquarters: 2230 Embassy Drive, Lancaster, PA 17603

Regional Distribution Centers: Lancaster, PA | Kansas City, MO
Henderson, NV | Auburn, WA

Design Office: Milan, Italy

pdqlocks.com

LT2026 8-2018